COLLINS

Collins 618T-(x) HF SSB Airborne transceiver

Schematic Diagrams

Courtesy AC5XP

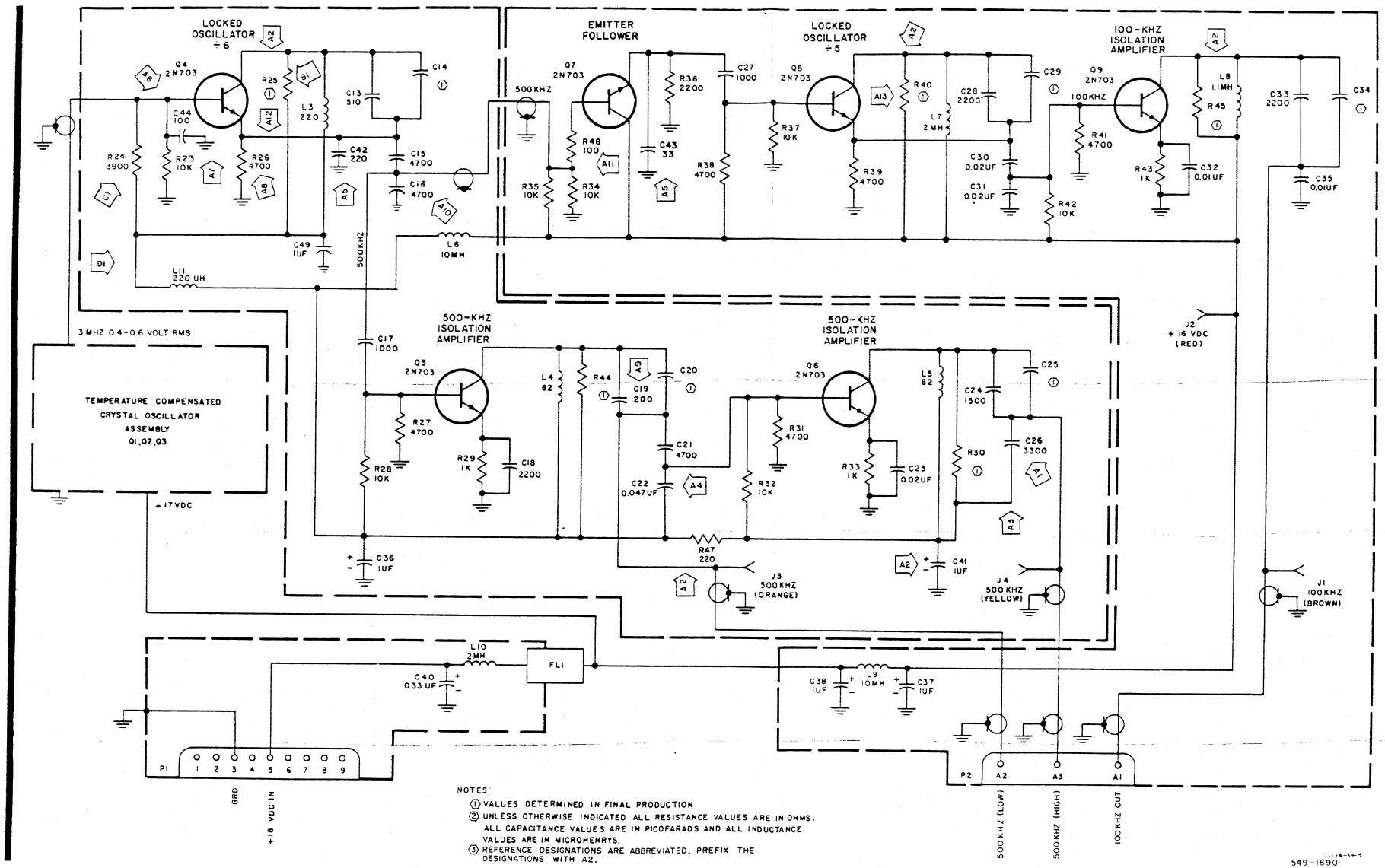

NOTES:

1. VALUES DETERMINED IN FINAL PRODUCTION
2. UNLESS OTHERWISE INDICATED ALL RESISTANCE VALUES ARE IN OHMS. ALL CAPACITANCE VALUES ARE IN PICOFARADS AND ALL INDUCTANCE VALUES ARE IN MICROHENRYS.
3. REFERENCE DESIGNATIONS ARE ABBREVIATED. PREFIX THE DESIGNATIONS WITH A2.

RF Oscillator A2 (528-0251-005),
Schematic Diagram
Figure 811

NOTE:
UNLESS OTHERWISE SPECIFIED; RESISTANCE VALUES ARE IN OHMS, CAPACITANCE VALUES ARE IN MICROFARADS
DIODES ARE TYPE 1N3064 AND TRANSISTORS ARE TYPE 2N930.

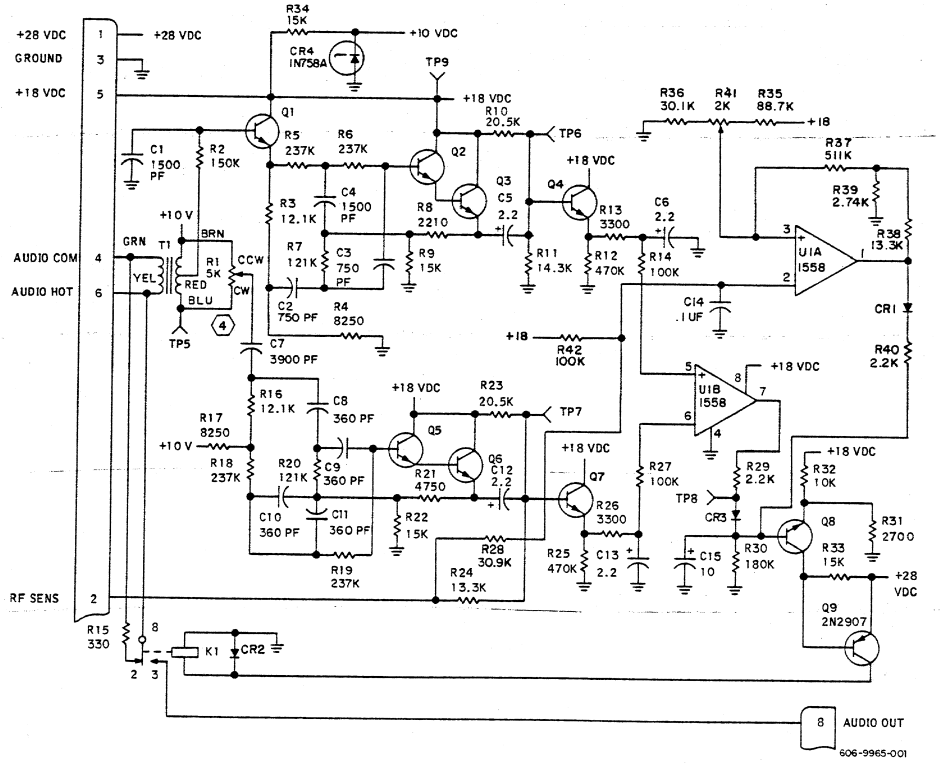

RF Oscillator (528-0690-002) Squelch Board (797-3684-002)
With Production Incorporation of Positive Override
Squelch, Schematic Diagram (Sheet 3 of 3)
Figure 810A

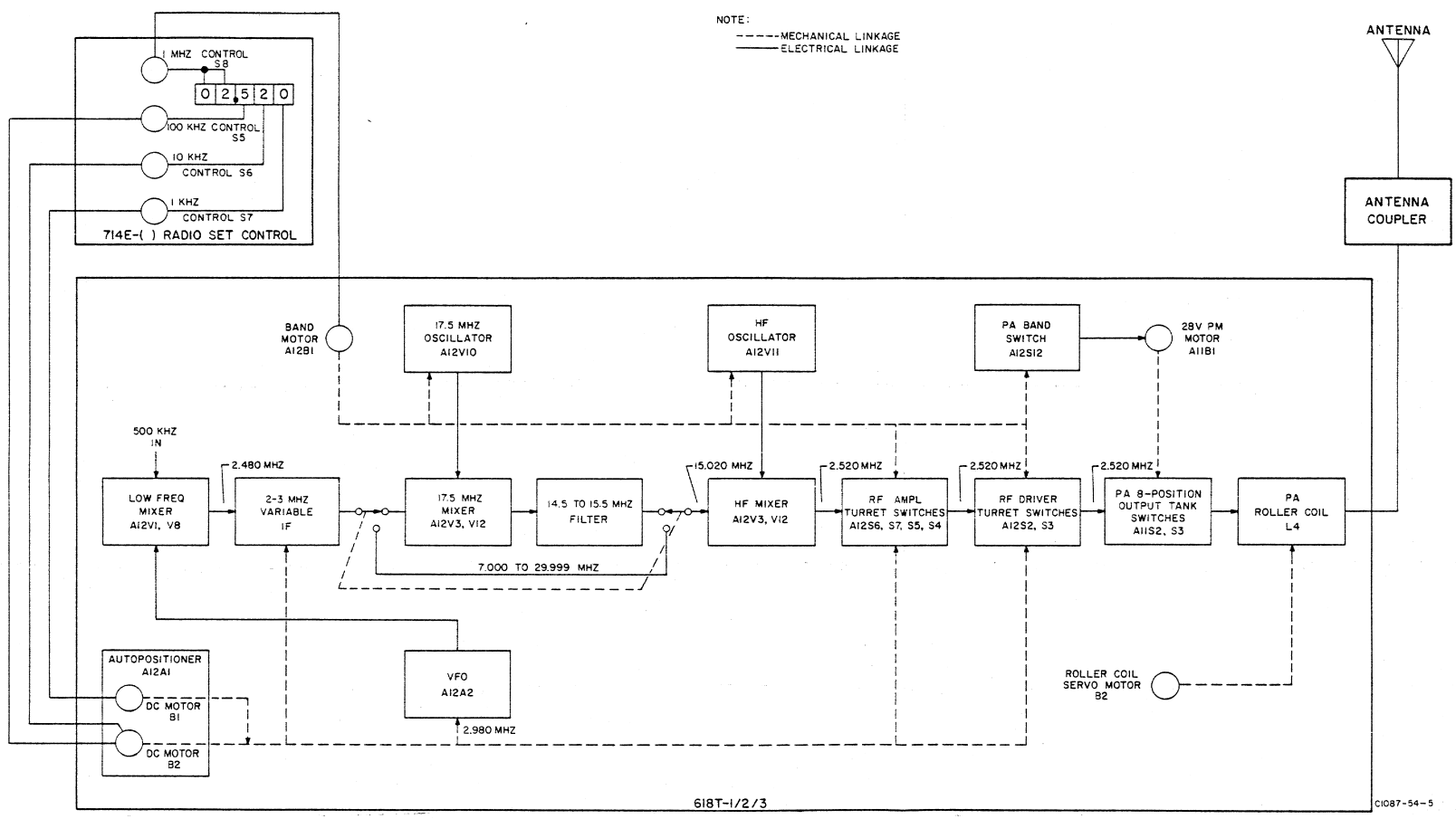

618T-1/2/3 Frequency Selection and Translation, Block Diagram
Figure 19

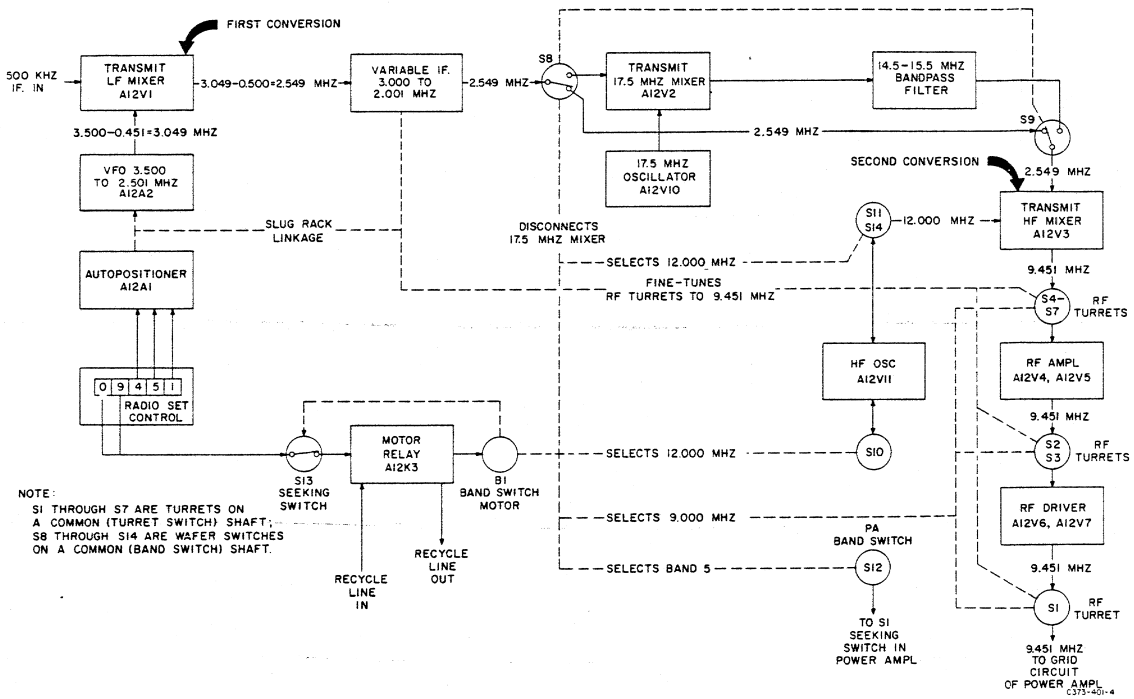

618T-1/2/3 Frequency Translation 7 to 29.999 MHz, Block Diagram
Figure 23

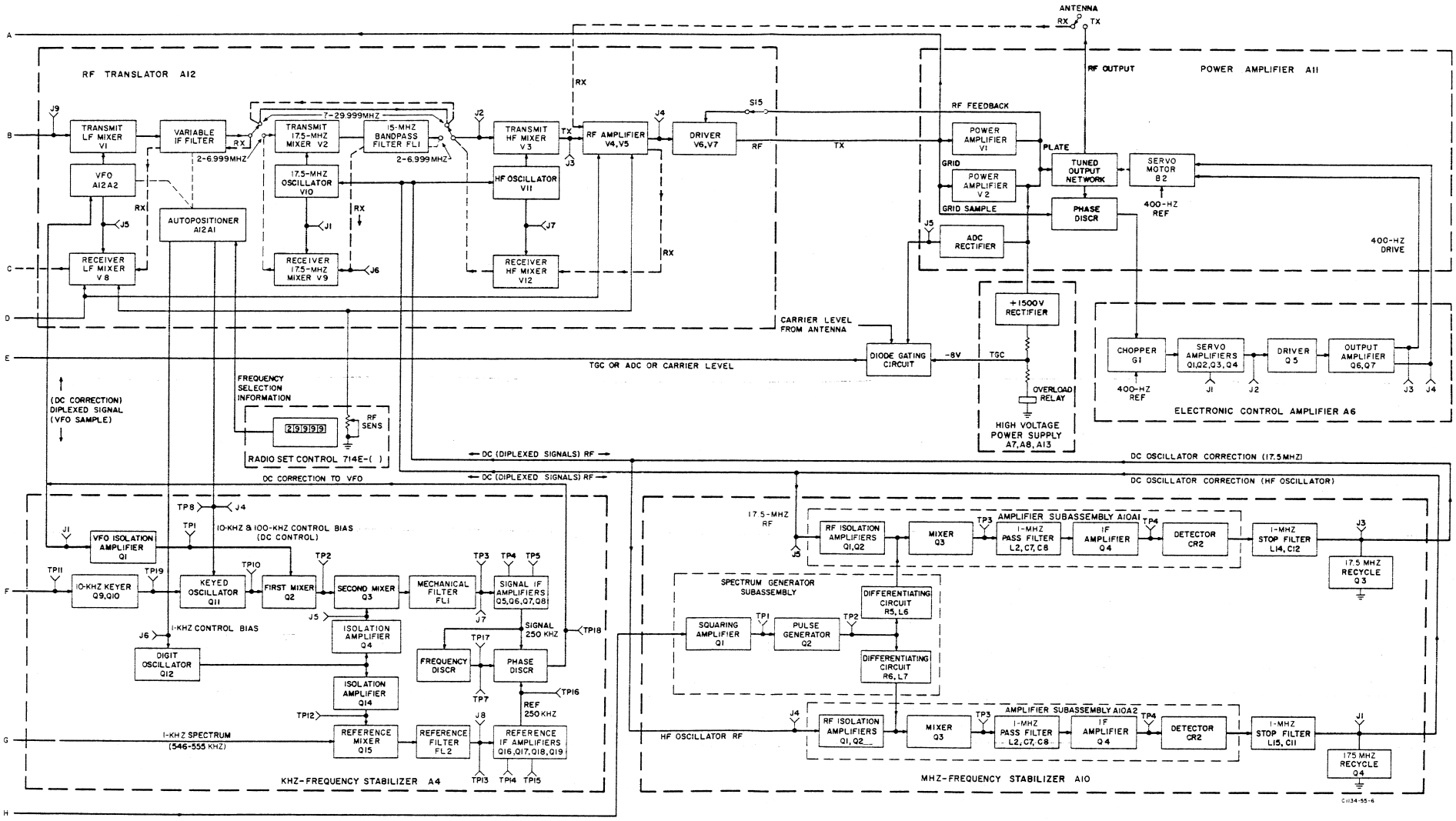

618T-1/2/3 Airborne SSB Transceivers, Block Diagram (Sheet 2 of 2)
Figure 17

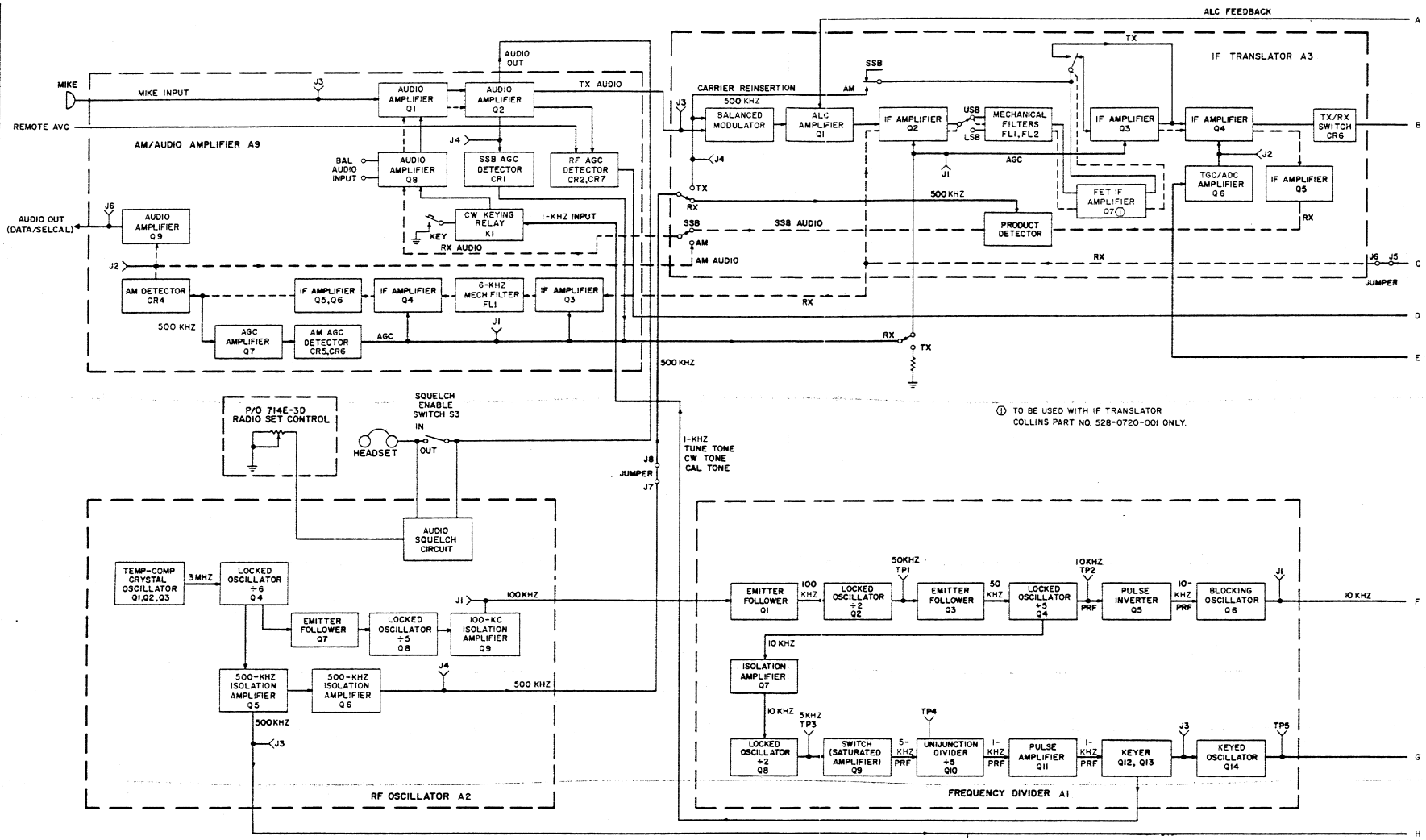

618T-1/2/3 Airborne SSB Transceivers, Block Diagram
Figure 17 (Sheet 1 of 2)

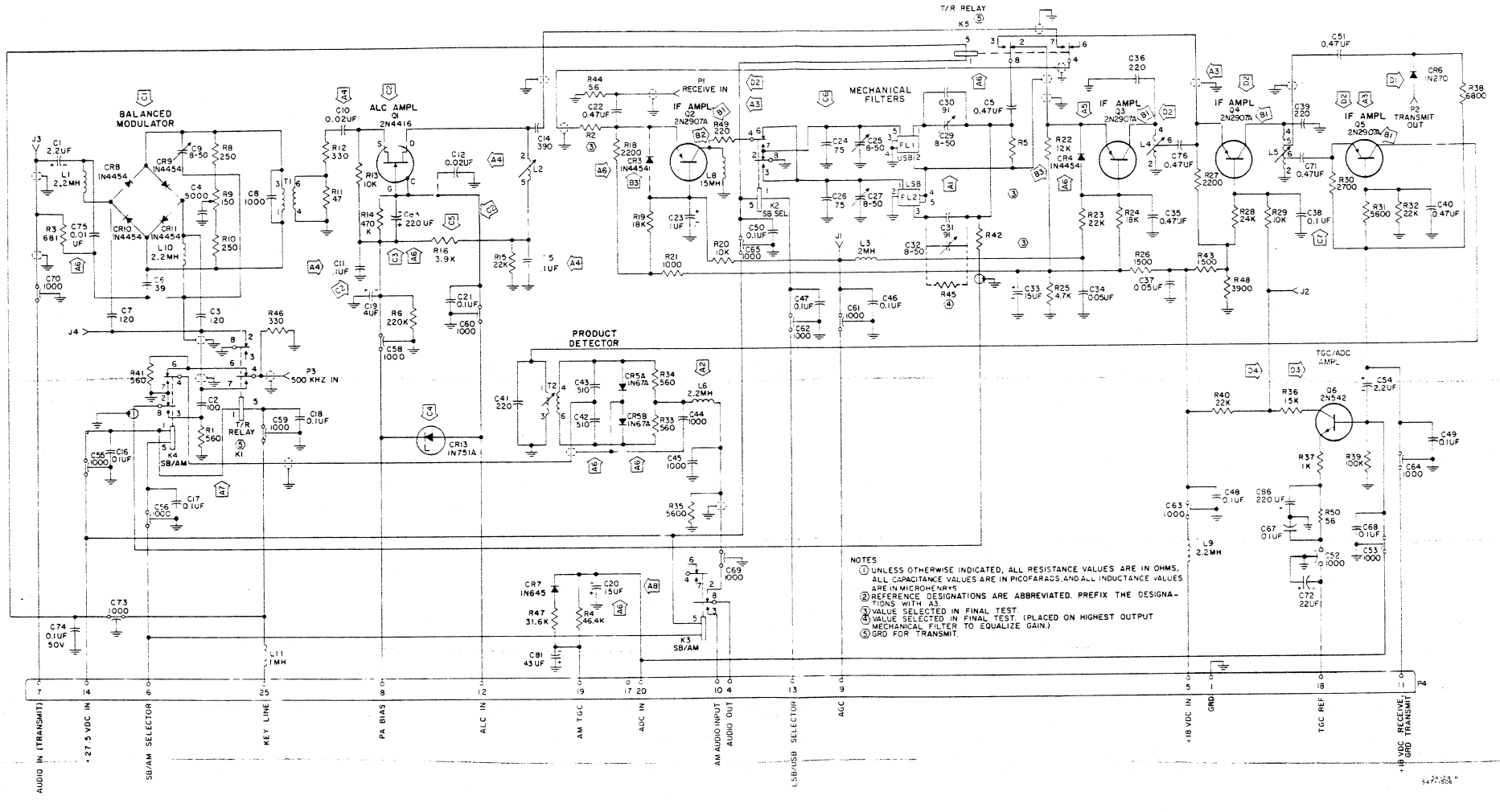

NOTES
1. UNLESS OTHERWISE INDICATED, ALL RESISTANCE VALUES ARE IN OHMS, ALL CAPACITANCE VALUES ARE IN PICOFARADS, AND ALL INDUCTANCE VALUES ARE IN MICROHENRYS.
2. REFERENCE DESIGNATIONS ARE ABBREVIATED. PREFIX THE DESIGNATIONS WITH A3.
3. VALUE SELECTED IN FINAL TEST.
4. VALUE SELECTED IN FINAL TEST. (PLACED ON HIGHEST OUTPUT MECHANICAL FILTER TO EQUALIZE GAIN.)
5. GRD FOR TRANSMIT.

IF Translator A3 (544-9286-001), Schematic Diagram
Figure 813

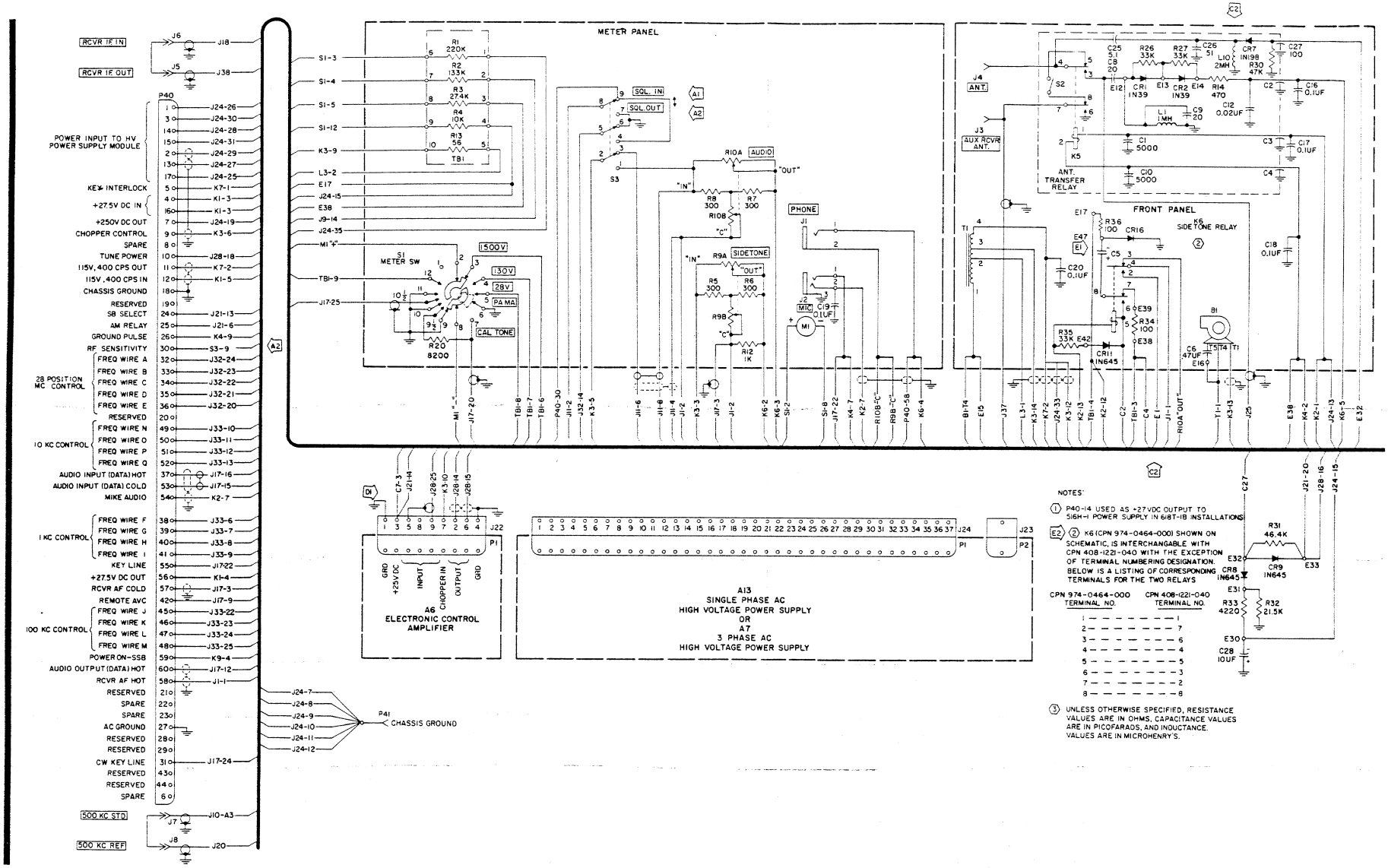

618T-1/2/3 Chassis A, Schematic Diagram
(Late Model)
Figure 807 (Sheet 1 of 3)

618T-( ) AIRBORNE SSB TRANSCEIVERS

OVERHAUL MANUAL (520-5970003)

TEMPORARY REVISION NO 23-10-0-8

This TEMPORARY REVISION replaces TEMPORARY REVISION NO 23-10-0-7

Insert facing page 817/818, 23-10-0

Subject: 618T-1/2/3 Chassis A, Schematic Diagram (Late Model), Figure 807 (Sheet 2).

Correct schematic wiring error of relay K4 pins 7 and 13 as follows:

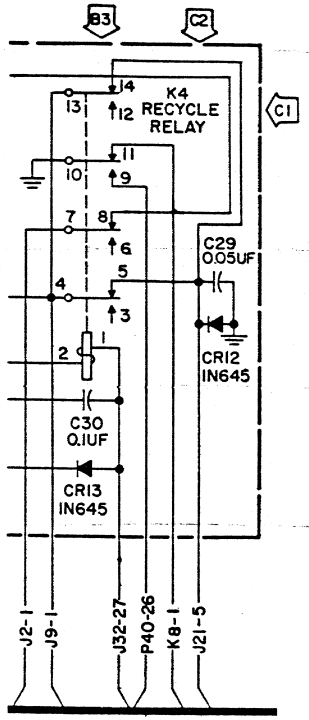

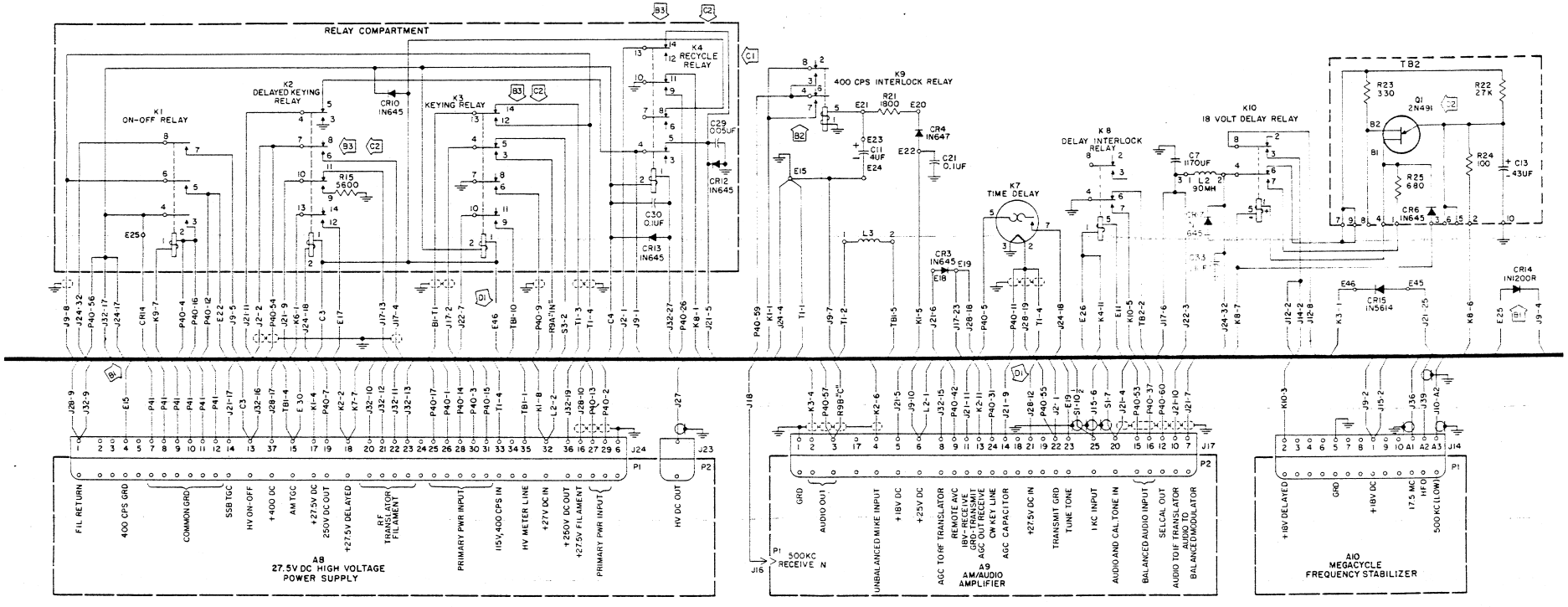

618T-1/2/3 Chassis A, Schematic Diagram (Late Model)
Figure 807 (Sheet 2)

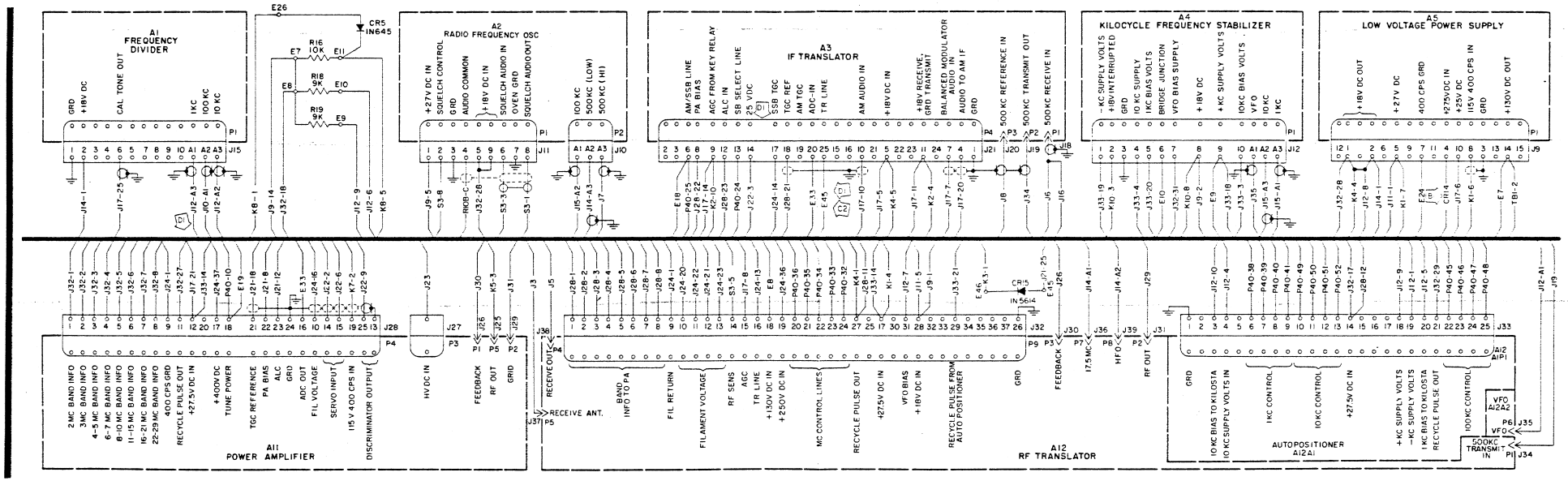

618T-1/2/3 Chassis A, Schematic Diagram (Late Model)
Figure 807 (Sheet 3)

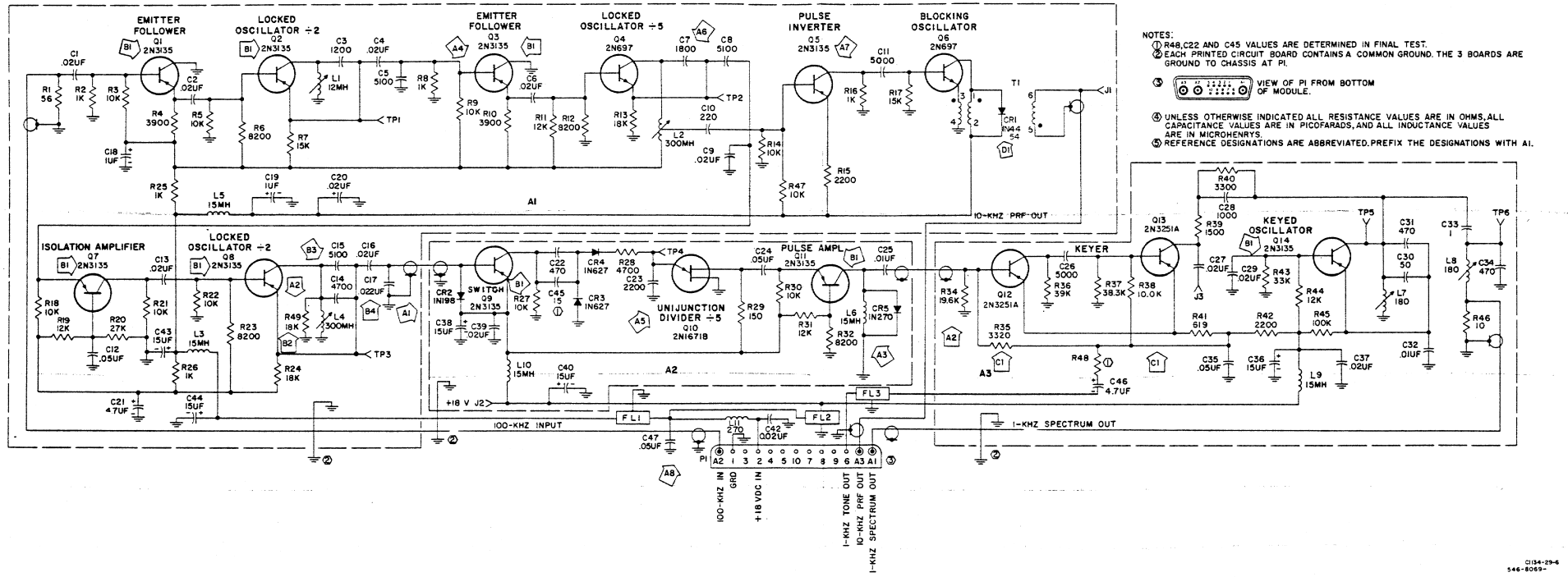

NOTES:
1. R48, C22 AND C45 VALUES ARE DETERMINED IN FINAL TEST.
2. EACH PRINTED CIRCUIT BOARD CONTAINS A COMMON GROUND. THE 3 BOARDS ARE GROUND TO CHASSIS AT P1.
3. VIEW OF P1 FROM BOTTOM OF MODULE.
4. UNLESS OTHERWISE INDICATED ALL RESISTANCE VALUES ARE IN OHMS, ALL CAPACITANCE VALUES ARE IN PICOFARADS, AND ALL INDUCTANCE VALUES ARE IN MICROHENRYS.
5. REFERENCE DESIGNATIONS ARE ABBREVIATED. PREFIX THE DESIGNATIONS WITH A1.

C134-29-6
546-8069-

618T-1/2/3 Frequency Divider A1, Schematic Diagram
Figure 809

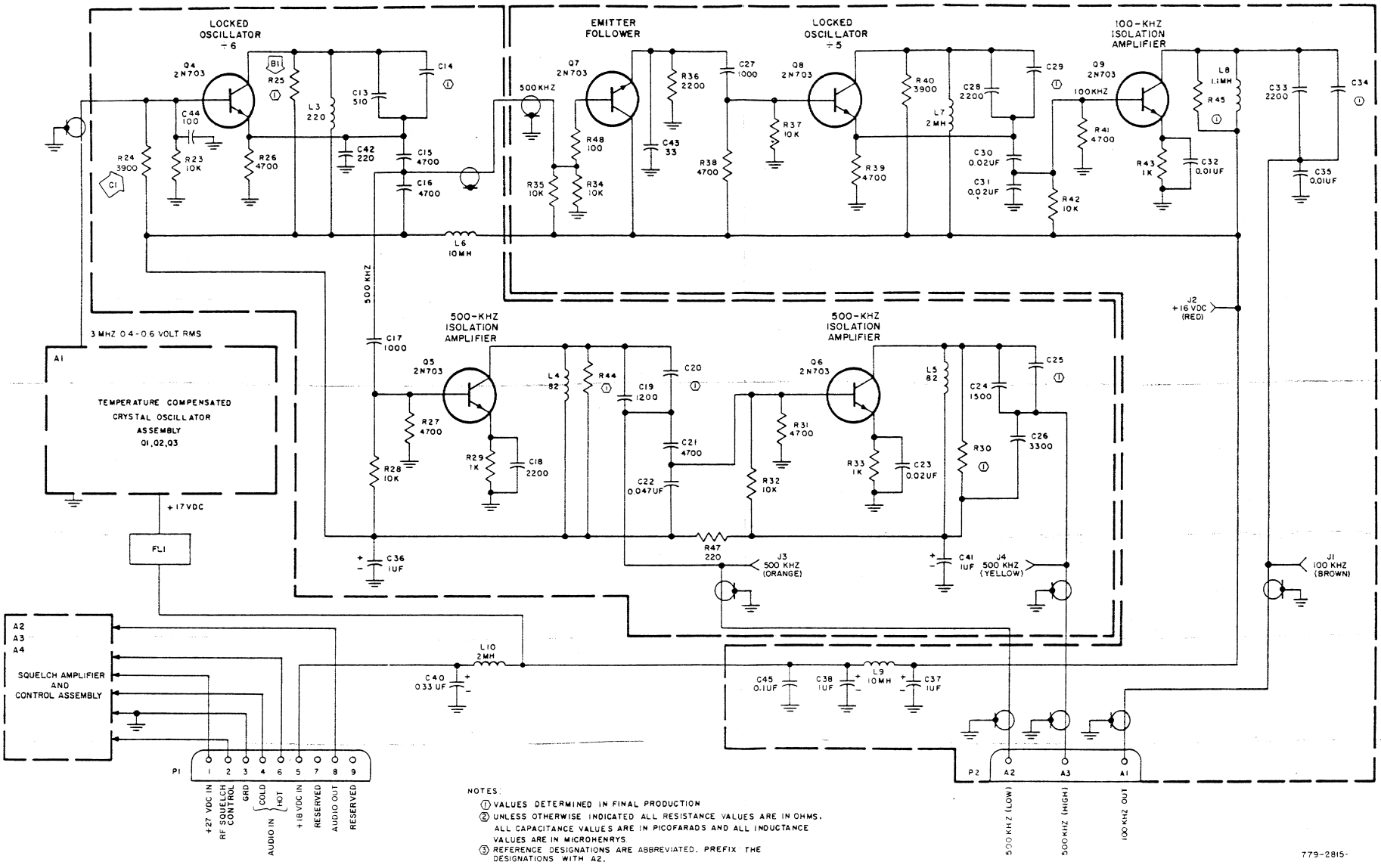

NOTES:
1. VALUES DETERMINED IN FINAL PRODUCTION
2. UNLESS OTHERWISE INDICATED ALL RESISTANCE VALUES ARE IN OHMS. ALL CAPACITANCE VALUES ARE IN PICOFARADS AND ALL INDUCTANCE VALUES ARE IN MICROHENRYS.
3. REFERENCE DESIGNATIONS ARE ABBREVIATED. PREFIX THE DESIGNATIONS WITH A2.

RF Oscillator A2 (528-0690-001),
Schematic Diagram
Figure 810 (Sheet 1 of 2)

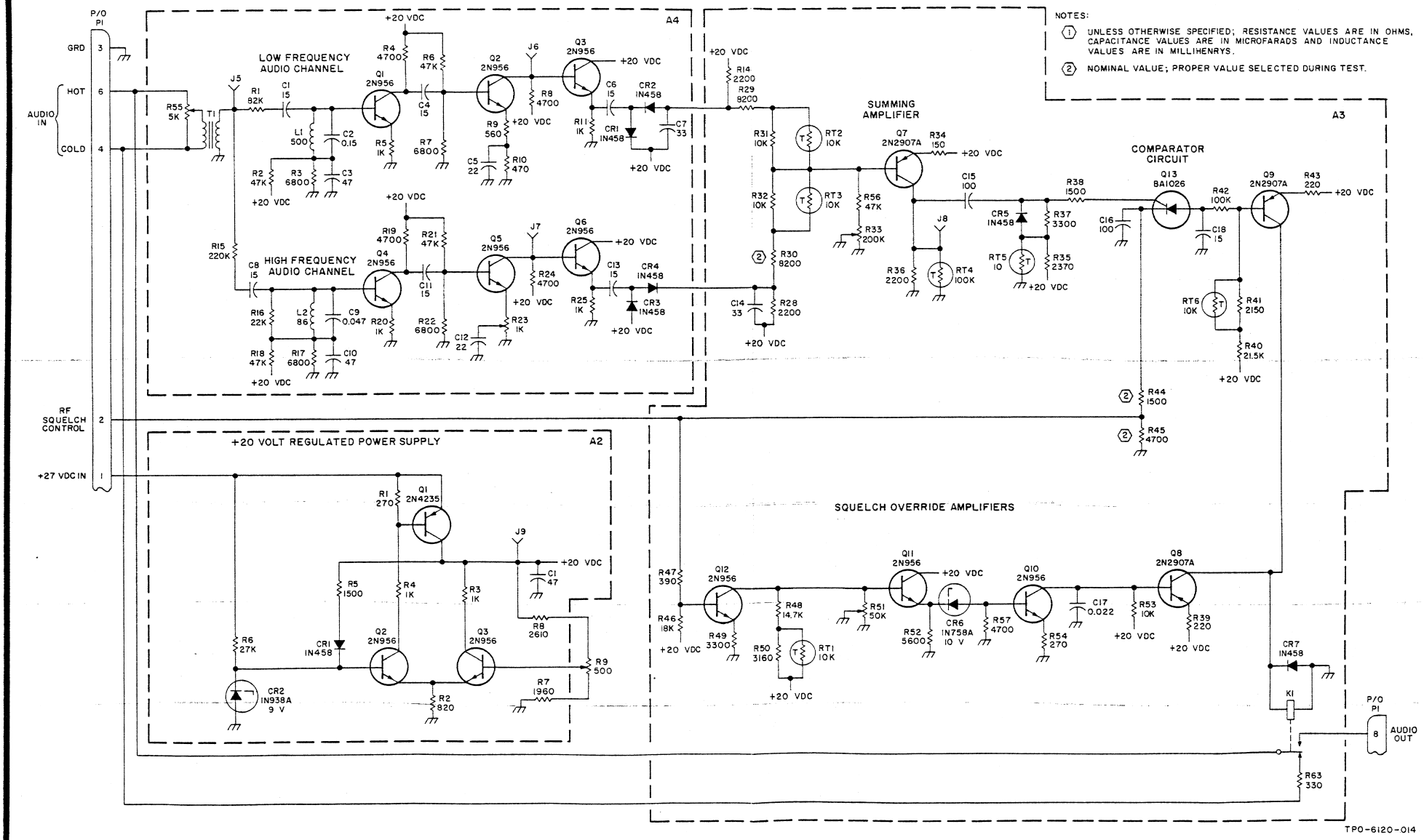
NOTES:
1 UNLESS OTHERWISE SPECIFIED; RESISTANCE VALUES ARE IN OHMS, CAPACITANCE VALUES ARE IN MICROFARADS AND INDUCTANCE VALUES ARE IN MILLIHENRYS.
2 NOMINAL VALUE; PROPER VALUE SELECTED DURING TEST.
A4
LOW FREQUENCY AUDIO CHANNEL
HIGH FREQUENCY AUDIO CHANNEL
A3
SUMMING AMPLIFIER
COMPARATOR CIRCUIT
A2
+20 VOLT REGULATED POWER SUPPLY
SQUELCH OVERRIDE AMPLIFIERS
P/O P1
GRD
HOT
COLD
AUDIO IN
RF SQUELCH CONTROL
+27 VDC IN
AUDIO OUT
+20 VDC
TPO-6120-014

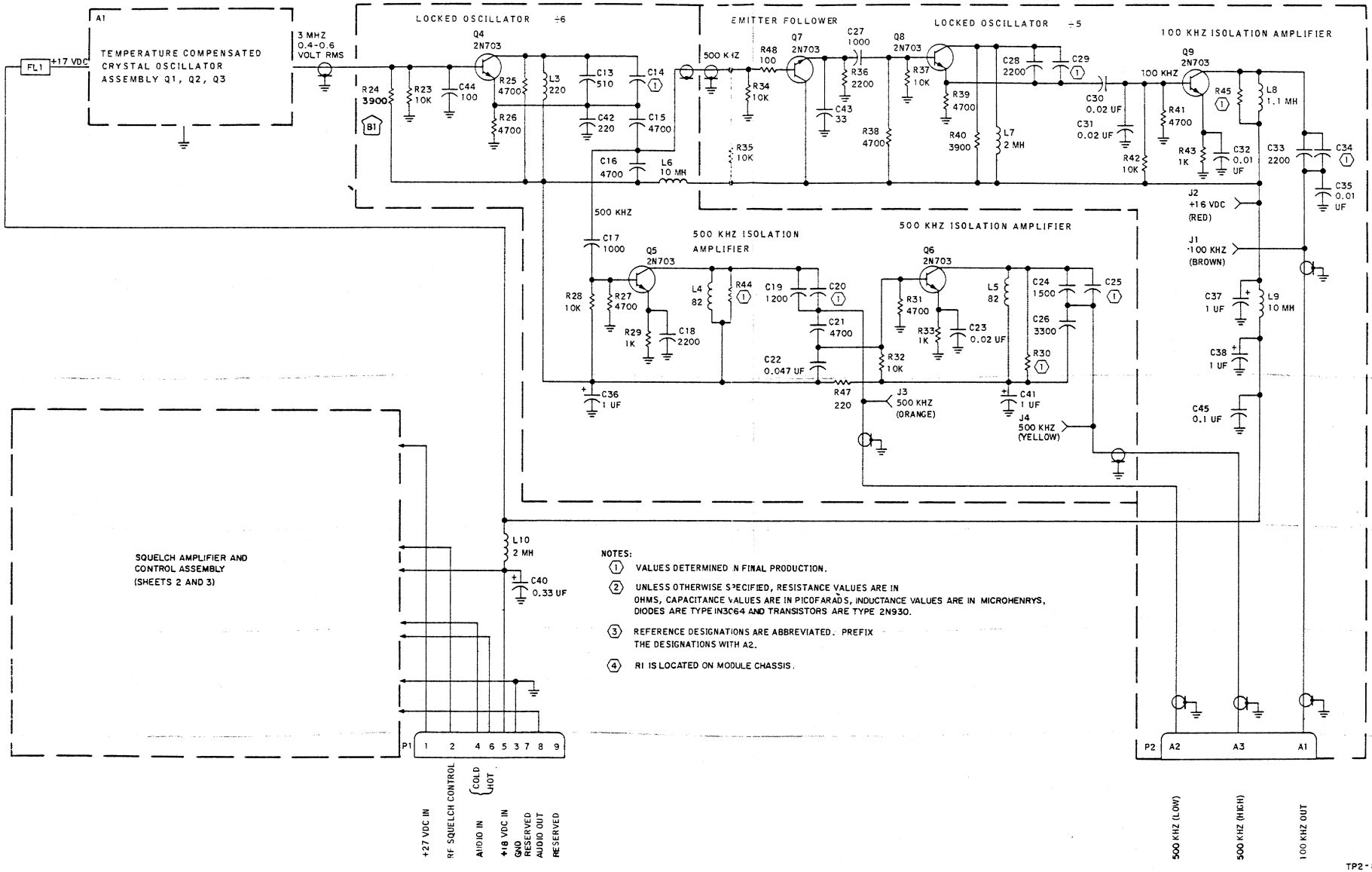

NOTES:

1. VALUES DETERMINED IN FINAL PRODUCTION.
2. UNLESS OTHERWISE SPECIFIED, RESISTANCE VALUES ARE IN OHMS, CAPACITANCE VALUES ARE IN PICOFARADS, INDUCTANCE VALUES ARE IN MICROHENRYS, DIODES ARE TYPE IN3064 AND TRANSISTORS ARE TYPE 2N930.
3. REFERENCE DESIGNATIONS ARE ABBREVIATED. PREFIX THE DESIGNATIONS WITH A2.
4. R1 IS LOCATED ON MODULE CHASSIS.

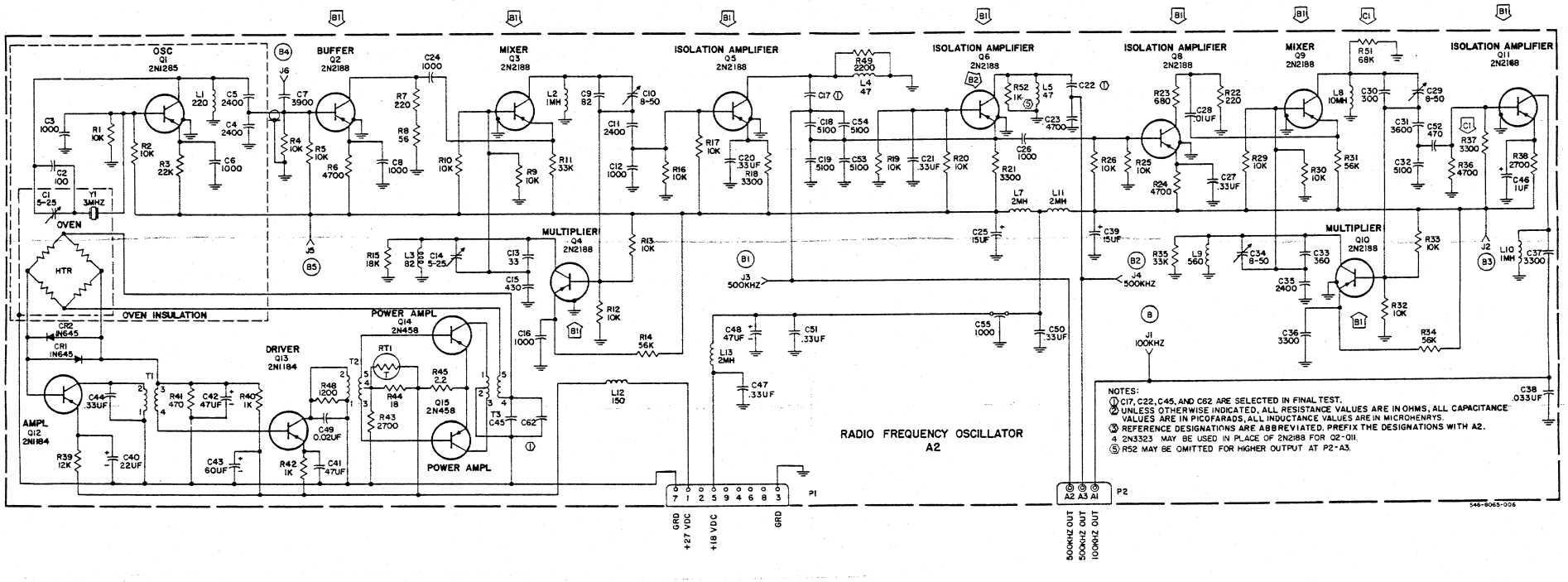

RF Oscillator A2 (544-9285-005), Schematic Diagram
Figure 812

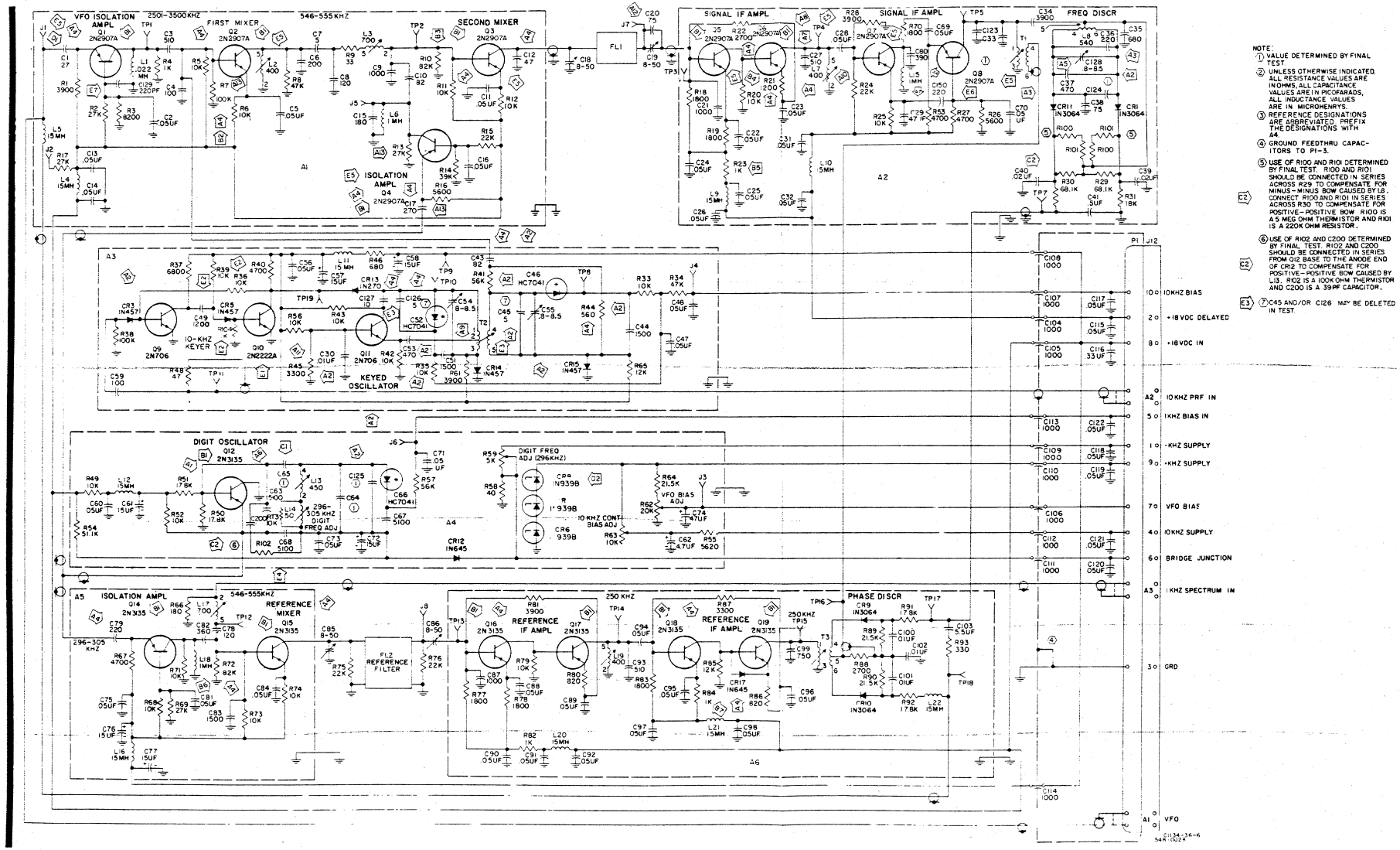

NOTE:
1. VALUE DETERMINED BY FINAL TEST.
2. UNLESS OTHERWISE INDICATED, ALL RESISTANCE VALUES ARE IN OHMS, ALL CAPACITANCE VALUES ARE IN PICOFARADS, ALL INDUCTANCE VALUES ARE IN MICROHENRYS.
3. REFERENCE DESIGNATIONS ARE ABBREVIATED. PREFIX THE DESIGNATIONS WITH A4.
4. GROUND FEEDTHRU CAPACITORS TO P1-3.
5. USE OF R100 AND R101 DETERMINED BY FINAL TEST. R100 AND R101 SHOULD BE CONNECTED IN SERIES ACROSS R29 TO COMPENSATE FOR MINUS-MINUS BOW CAUSED BY L8. CONNECT R100 AND R101 IN SERIES ACROSS R30 TO COMPENSATE FOR POSITIVE-POSITIVE BOW. R100 IS A 5 MEG OHM THERMISTOR AND R101 IS A 220K OHM RESISTOR.
6. USE OF R102 AND C200 DETERMINED BY FINAL TEST. R102 AND C200 SHOULD BE CONNECTED IN SERIES FROM Q12 BASE TO THE ANODE END OF CR12 TO COMPENSATE FOR POSITIVE-POSITIVE BOW CAUSED BY L13. R102 IS A 100K OHM THERMISTOR AND C200 IS A 39PF CAPACITOR.
7. C45 AND/OR C126 MAY BE DELETED IN TEST.

618T-1/2/3 kHz-Frequency Stabilizer A4, Schematic Diagram (Late Model)
Figure 814

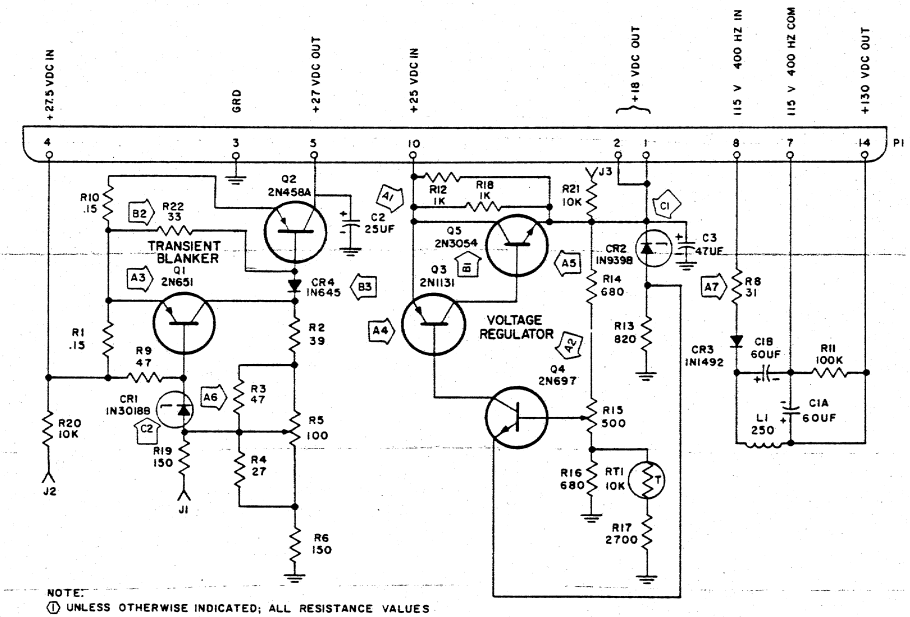

NOTE:
① UNLESS OTHERWISE INDICATED; ALL RESISTANCE VALUES ARE IN OHMS, ALL CAPACITANCE VALUES ARE IN PICOFARADS AND ALL INDUCTANCE VALUES ARE IN MILLIHENRYS.
② REFERENCE DESIGNATIONS ARE ABBREVIATED. PREFIX THE DESIGNATIONS WITH A5.

547-1505-
C1134-34-4

Low-Voltage Power Supply A5, Schematic Diagram
Figure 816

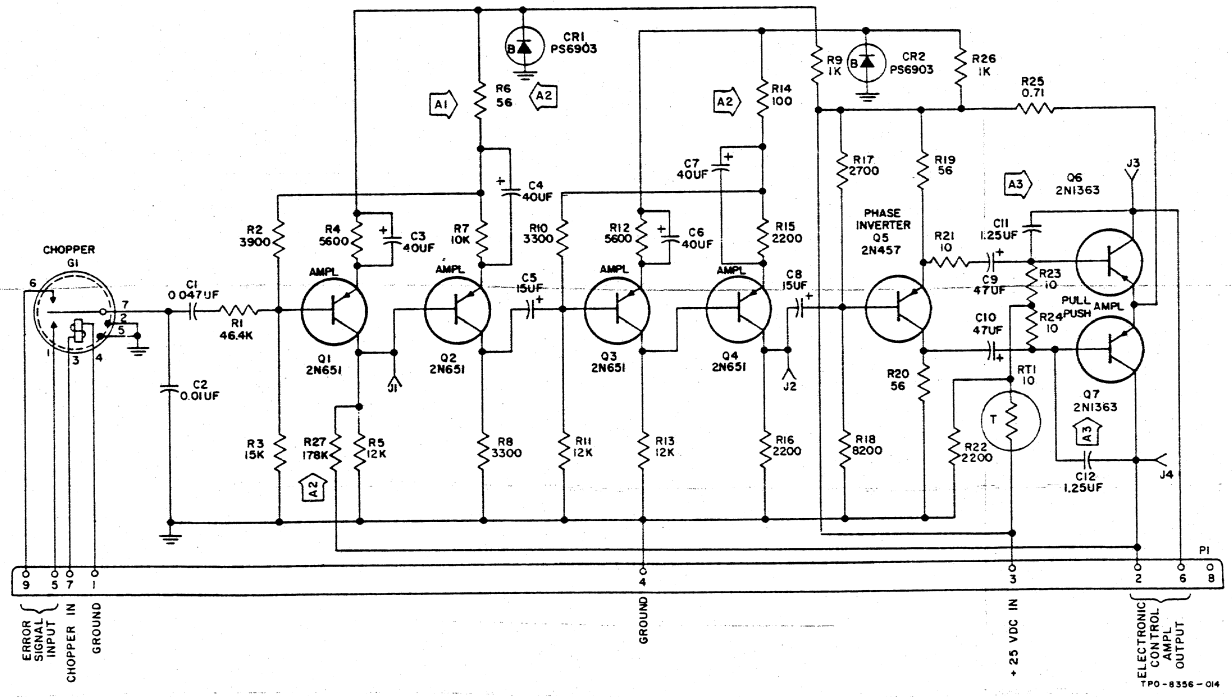

Electronic Control Amplifier A6, Schematic Diagram
Figure 817

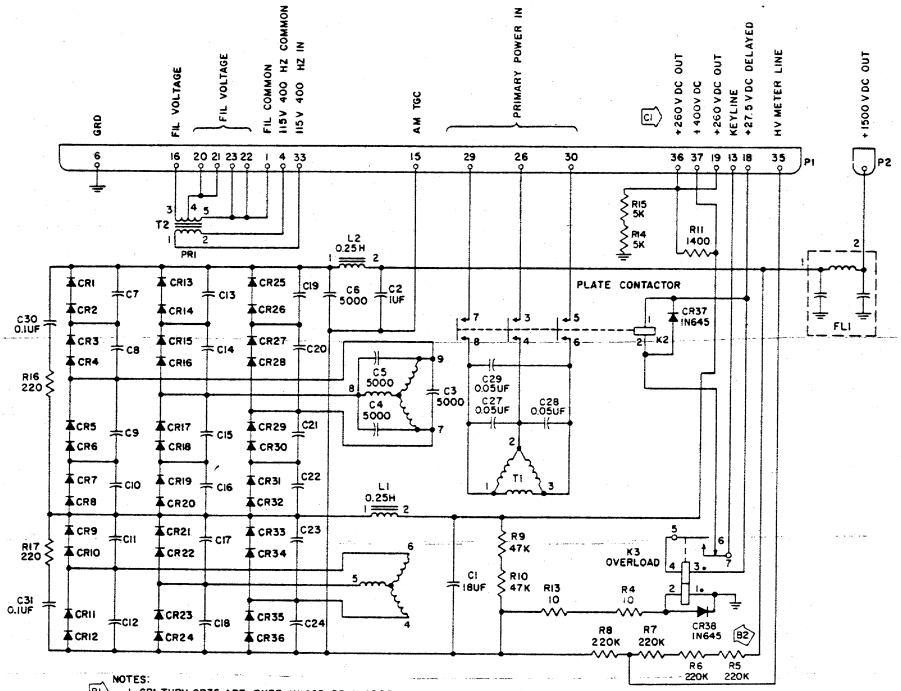

3-Phase High-Voltage Power Supply A7, Schematic Diagram (Late Model)
Figure 818

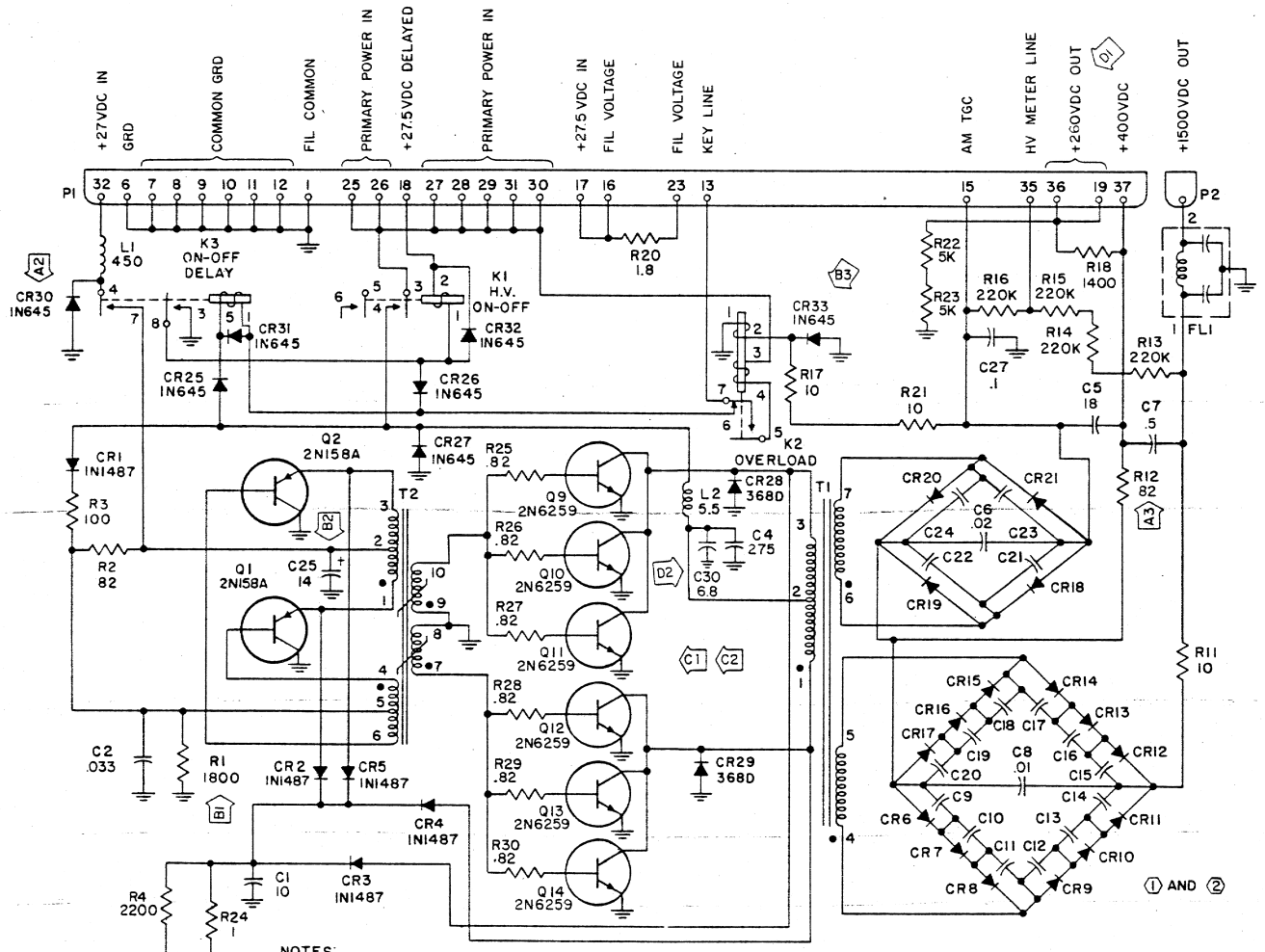

NOTES:

① CR6 THRU CR21 ARE TYPE 1N1492 ~~OR 1N4005~~.

② C9 THRU C24 ARE 1000PF.

③ UNLESS OTHERWISE SPECIFIED; RESISTANCE VALUES ARE IN OHMS, CAPACITANCE VALUES ARE IN MICROFARADS, AND INDUCTANCE VALUES ARE IN MICROHENRYS.

④ REFERENCE DESIGNATIONS ARE ABBREVIATED. PREFIX ALL DESIGNATIONS WITH THE ASSEMBLY DESIGNATION A8.

547-1502-

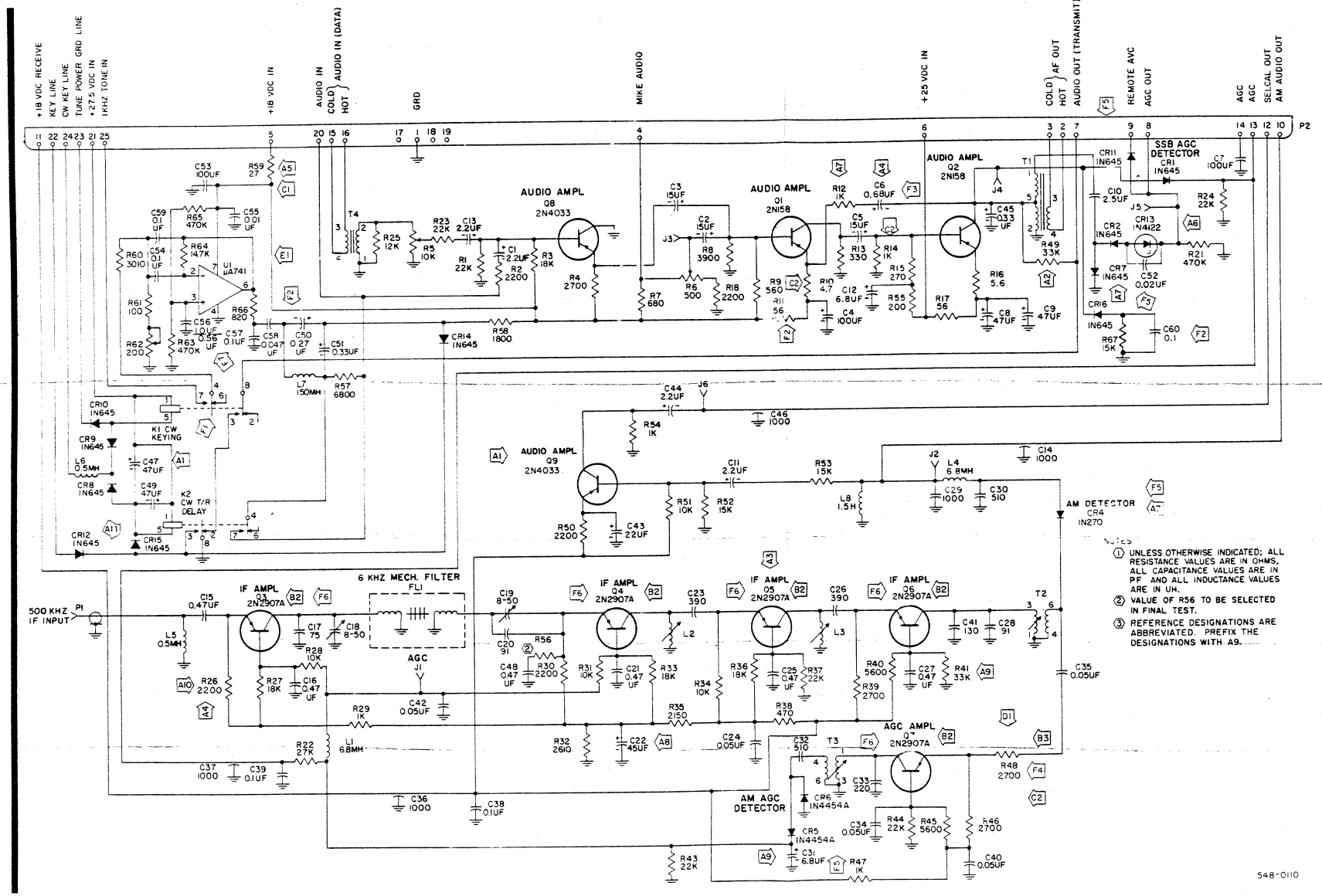

AM/Audio Amplifier A9, Schematic Diagram
(Late Model)
Figure 822

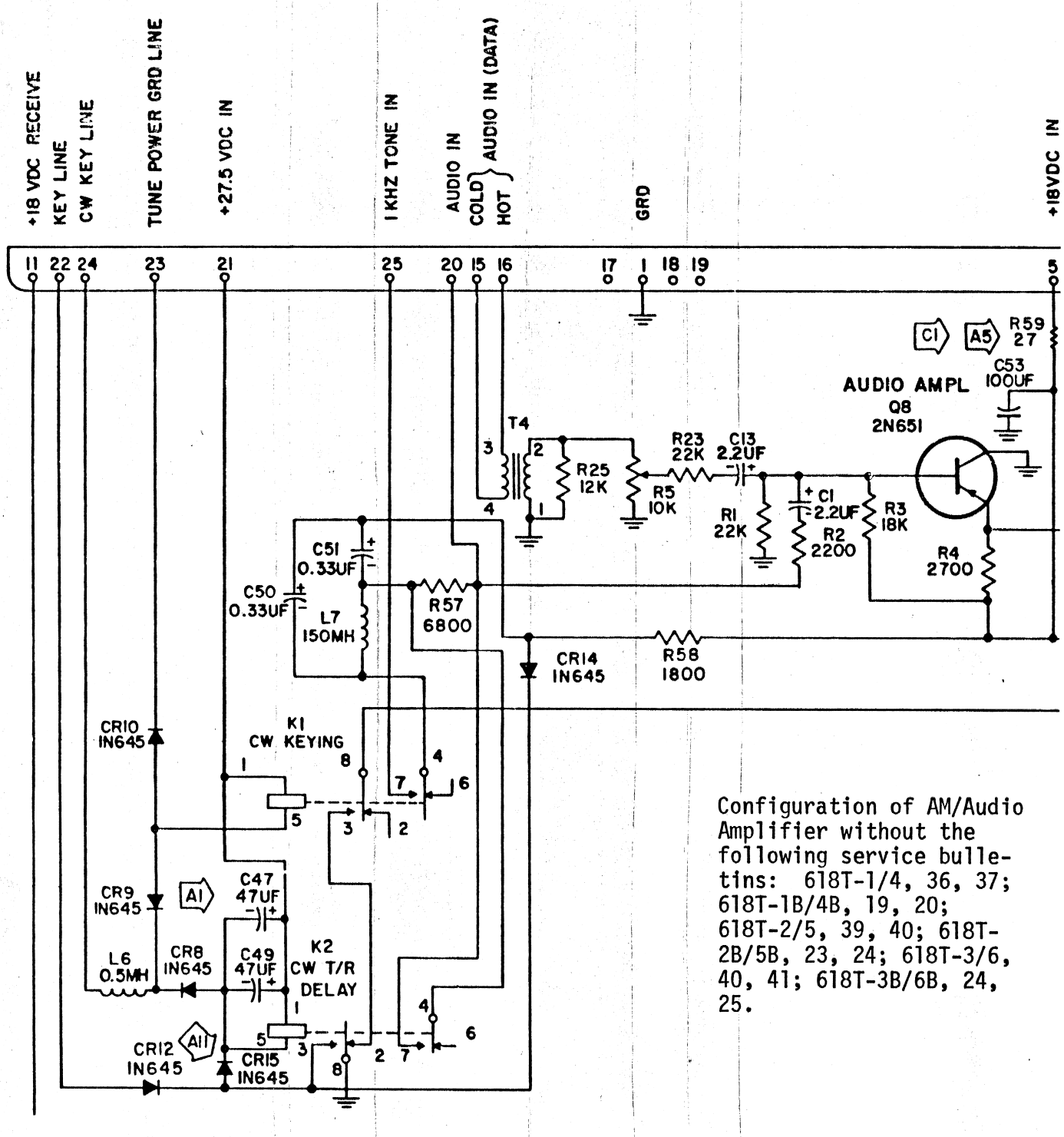

Configuration of AM/Audio Amplifier without the following service bulletins: 618T-1/4, 36, 37; 618T-1B/4B, 19, 20; 618T-2/5, 39, 40; 618T-2B/5B, 23, 24; 618T-3/6, 40, 41; 618T-3B/6B, 24, 25.

AM/Audio Amplifier A9, Schematic Diagram

(Late Model) Sheet 2

Figure 822

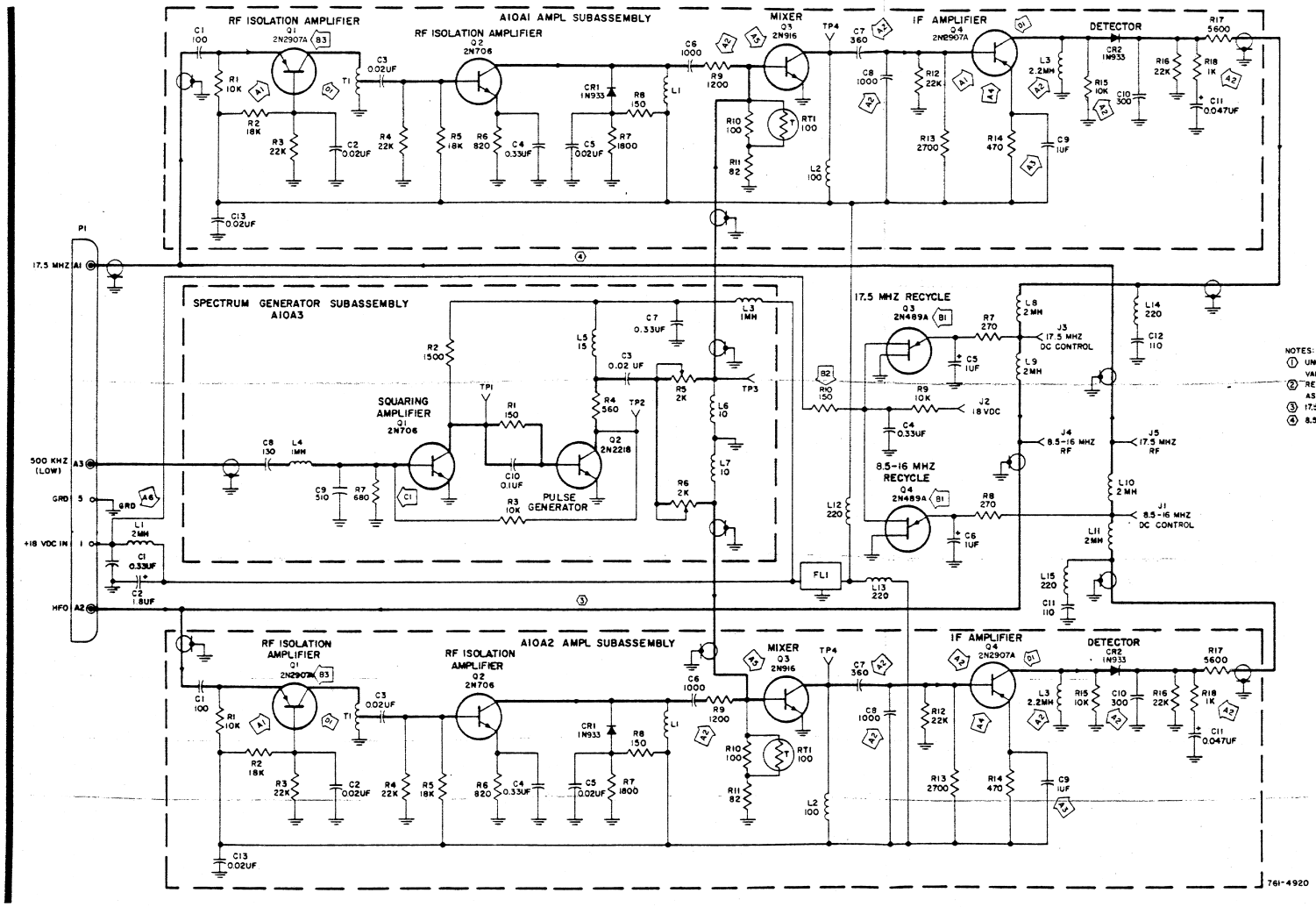

NOTES:
1. UNLESS OTHERWISE INDICATED, ALL RESISTANCE VALUES ARE IN OHMS, ALL CAPACITANCE VALUES ARE IN PICOFARADS, AND ALL INDUCTANCE VALUES ARE IN MICROHENRYS.
2. REFERENCE DESIGNATIONS ARE ABBREVIATED. PREFIX THE DESIGNATIONS WITH THE ASSEMBLY/SUBASSEMBLY DESIGNATION A10, A10A1, OR A10A2.
3. 17.5 MHZ DC CONTROL IS RETURNED TO RF TRANSLATOR BY 8.5-16 MHZ RF LINE.
4. 8.5-16 MHZ DC CONTROL IS RETURNED TO RF TRANSLATOR BY 17.5 MHZ RF LINE.

MHz-Frequency Stabilizer A10, Schematic Diagram (Late Model)
Figure 824

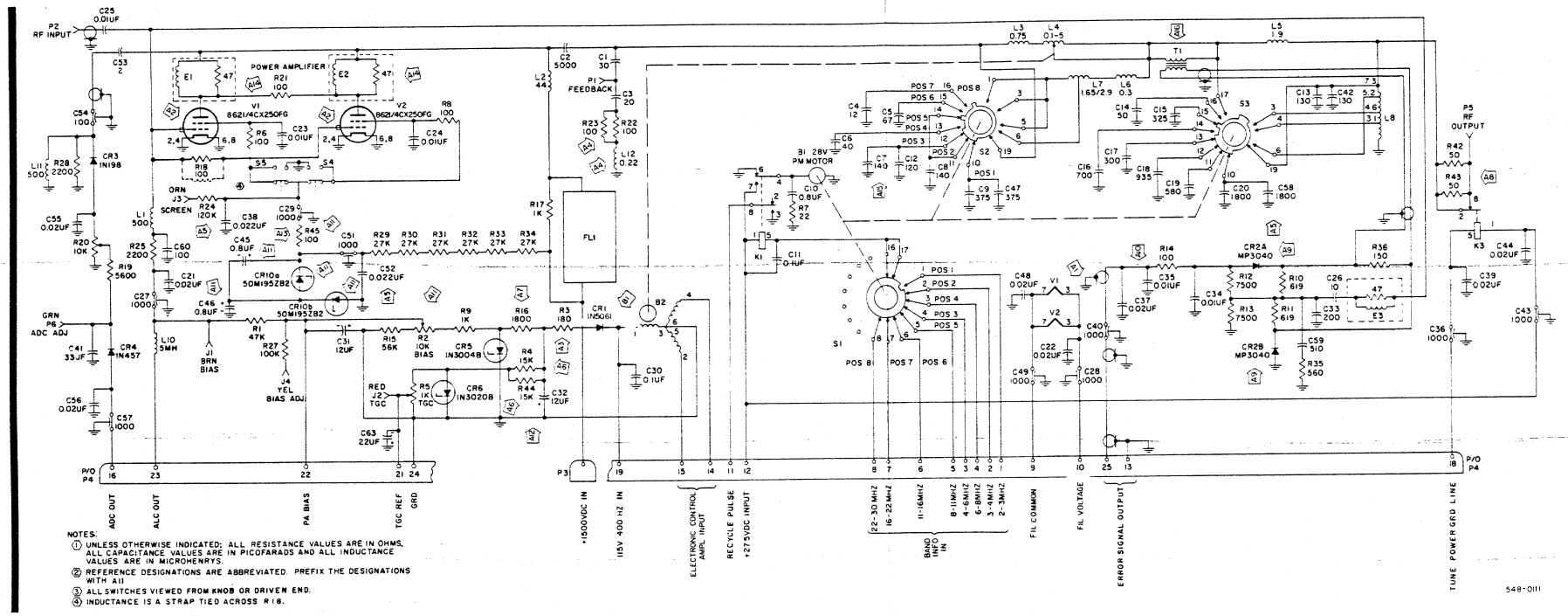

NOTES:
1. UNLESS OTHERWISE INDICATED: ALL RESISTANCE VALUES ARE IN OHMS, ALL CAPACITANCE VALUES ARE IN PICOFARADS AND ALL INDUCTANCE VALUES ARE IN MICROHENRYS.
2. REFERENCE DESIGNATIONS ARE ABBREVIATED. PREFIX THE DESIGNATIONS WITH A11
3. ALL SWITCHES VIEWED FROM KNOB OR DRIVEN END.
4. INDUCTANCE IS A STRAP TIED ACROSS R18.

Power Amplifier A11, Schematic Diagram (Late Model)
Figure 826

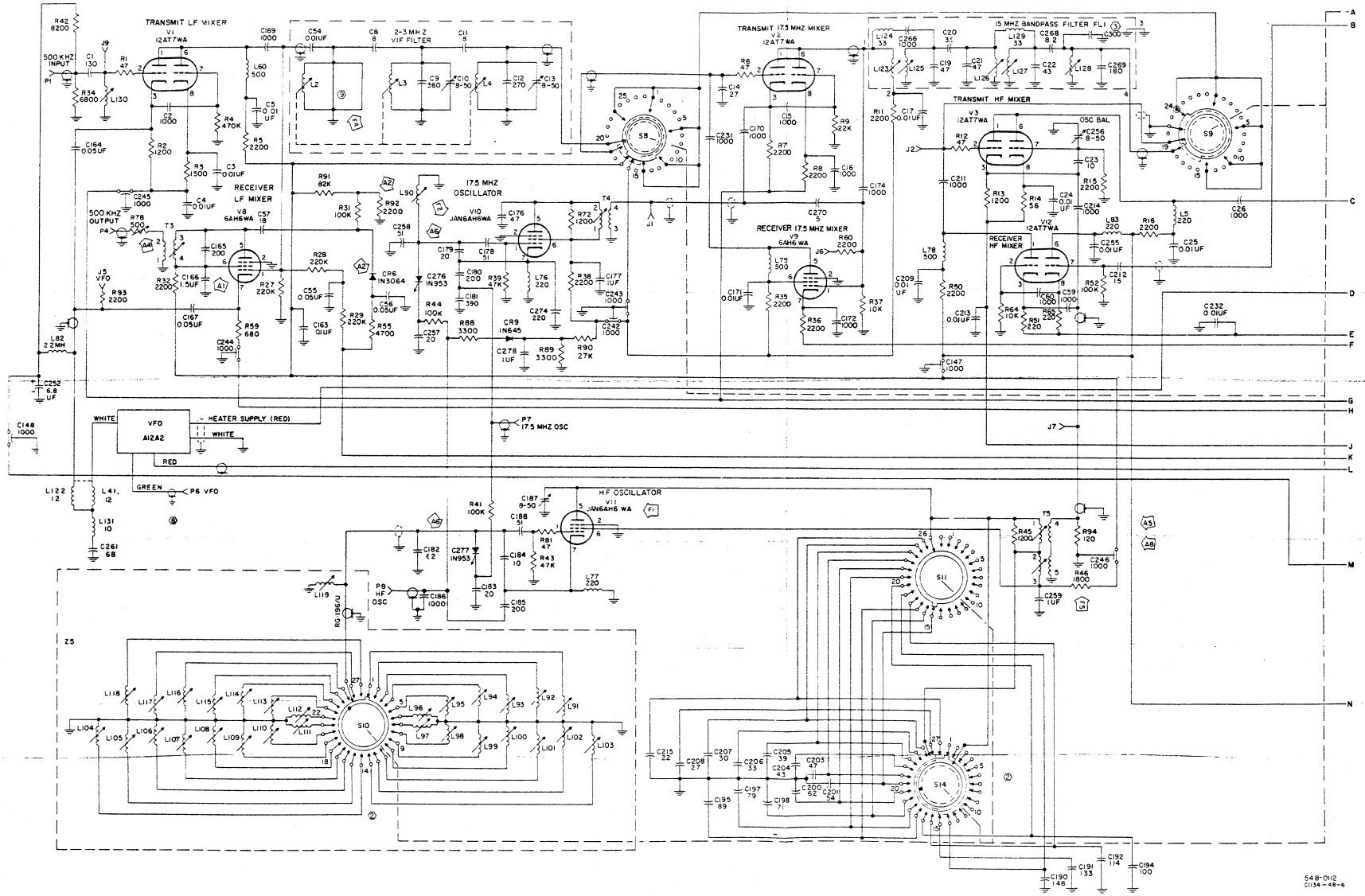

618T-1/2/3 RF Translator A12, Schematic Diagram (Late Model)
Figure 830 (Sheet 1 of 3)

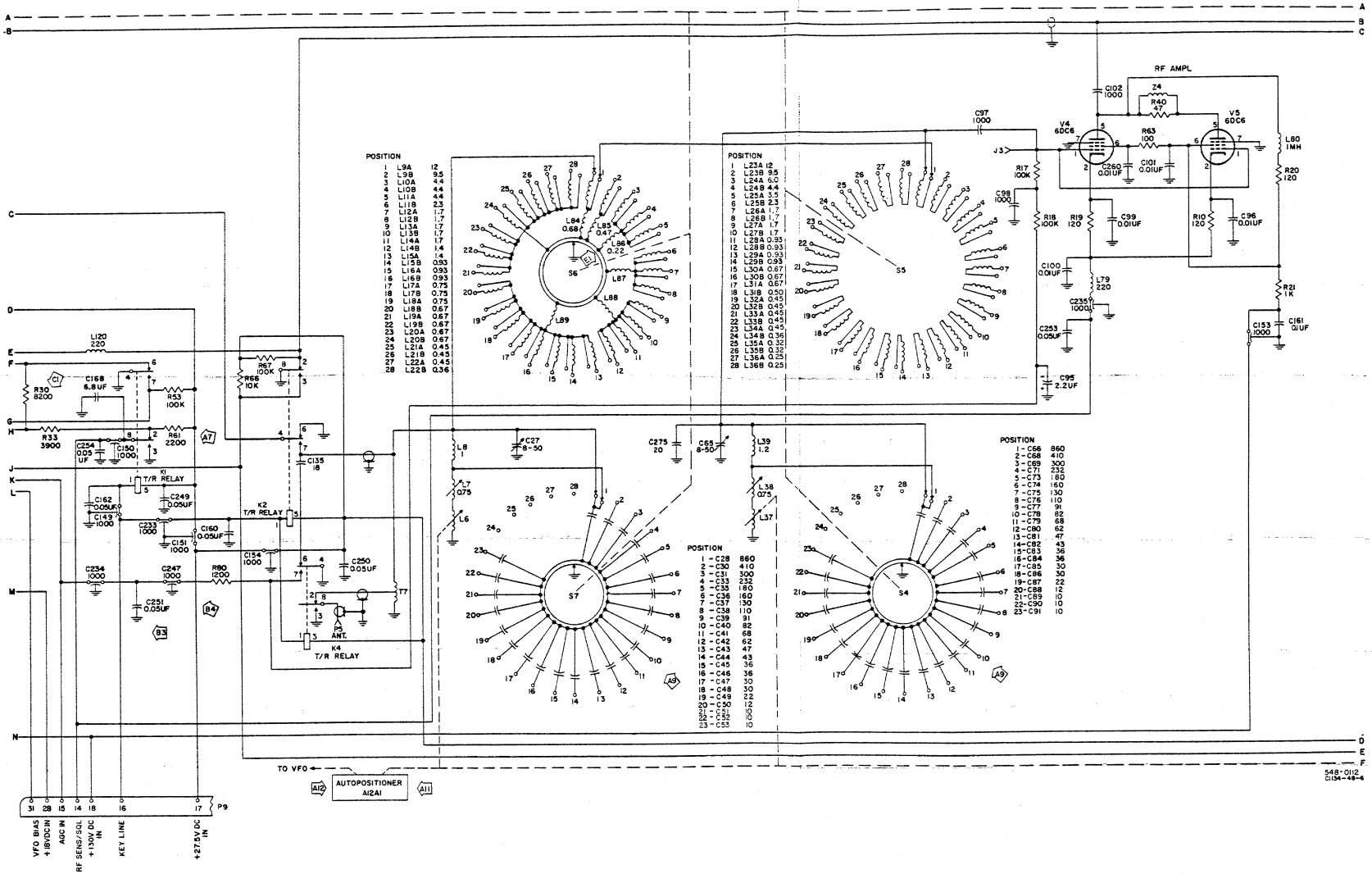

618T-1/2/3 RF Translator A12,
Schematic Diagram (Late Model)
Figure 830 (Sheet 2)

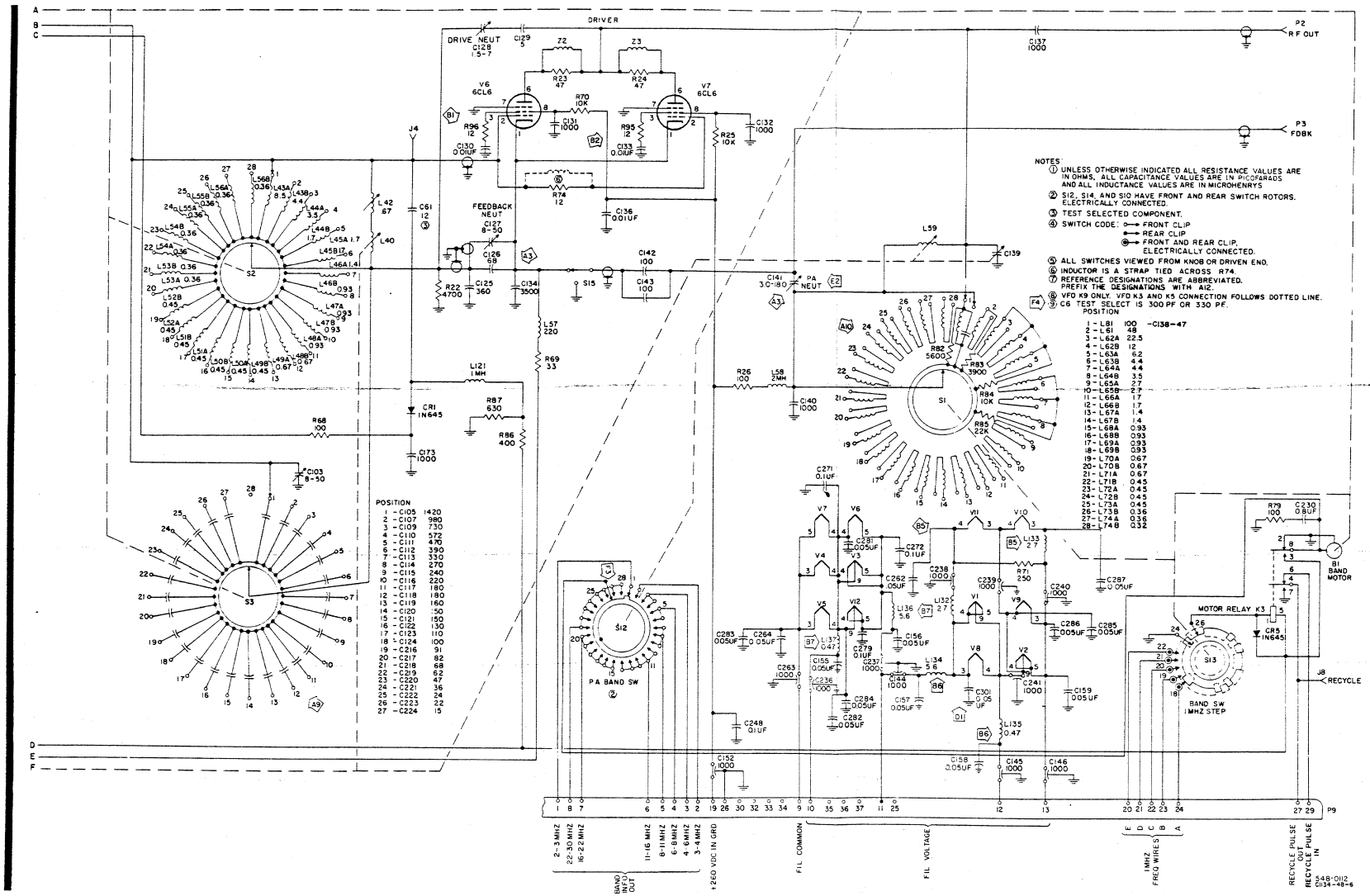

NOTES:
1. UNLESS OTHERWISE INDICATED ALL RESISTANCE VALUES ARE IN OHMS, ALL CAPACITANCE VALUES ARE IN PICOFARADS AND ALL INDUCTANCE VALUES ARE IN MICROHENRYS
2. S12, S14 AND S10 HAVE FRONT AND REAR SWITCH ROTORS. ELECTRICALLY CONNECTED.
3. TEST SELECTED COMPONENT.
4. SWITCH CODE: FRONT CLIP; REAR CLIP; FRONT AND REAR CLIP, ELECTRICALLY CONNECTED.
5. ALL SWITCHES VIEWED FROM KNOB OR DRIVEN END.
6. INDUCTOR IS A STRAP TIED ACROSS R74.
7. REFERENCE DESIGNATIONS ARE ABBREVIATED. PREFIX THE DESIGNATIONS WITH A12.
8. VFO K9 ONLY. VFO K3 AND K5 CONNECTION FOLLOWS DOTTED LINE.
9. C6 TEST SELECT IS 300 PF OR 330 PF.

POSITION		
1	L81	100
2	L61	48
3	L62A	22.5
4	L62B	12
5	L63A	6.2
6	L63B	4.4
7	L64A	4.4
8	L64B	3.5
9	L65A	2.7
10	L65B	2.7
11	L66A	1.7
12	L66B	1.7
13	L67A	1.4
14	L67B	1.4
15	L68A	0.93
16	L68B	0.93
17	L69A	0.93
18	L69B	0.93
19	L70A	0.67
20	L70B	0.67
21	L71A	0.67
22	L71B	0.45
23	L72A	0.45
24	L72B	0.45
25	L73A	0.45
26	L73B	0.36
27	L74A	0.36
28	L74B	0.32

C138-47

POSITION		
1	C105	1420
2	C107	980
3	C109	730
4	C110	572
5	C111	470
6	C112	390
7	C113	330
8	C114	270
9	C115	240
10	C116	220
11	C117	180
12	C118	180
13	C119	160
14	C120	150
15	C121	150
16	C122	130
17	C123	110
18	C124	100
19	C216	91
20	C217	82
21	C218	68
22	C219	62
23	C220	47
24	C221	36
25	C222	24
26	C223	22
27	C224	15

618T-1/2/3 RF Translator A12, Schematic Diagram (Late Model)
Figure 830 (Sheet 3)

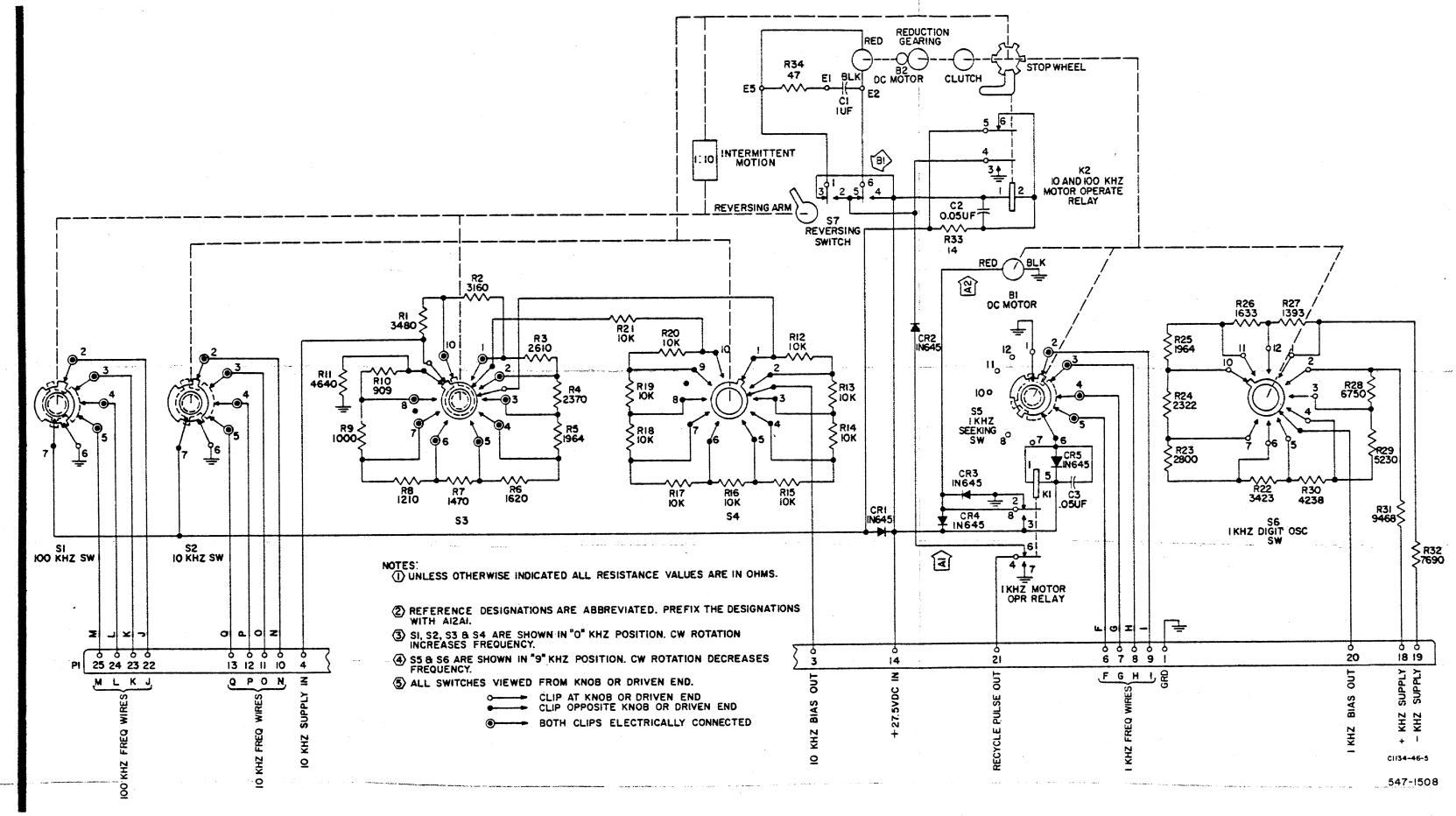

618T-1/2/3 Autopositioner A12A1, Schematic Diagram
Figure 832

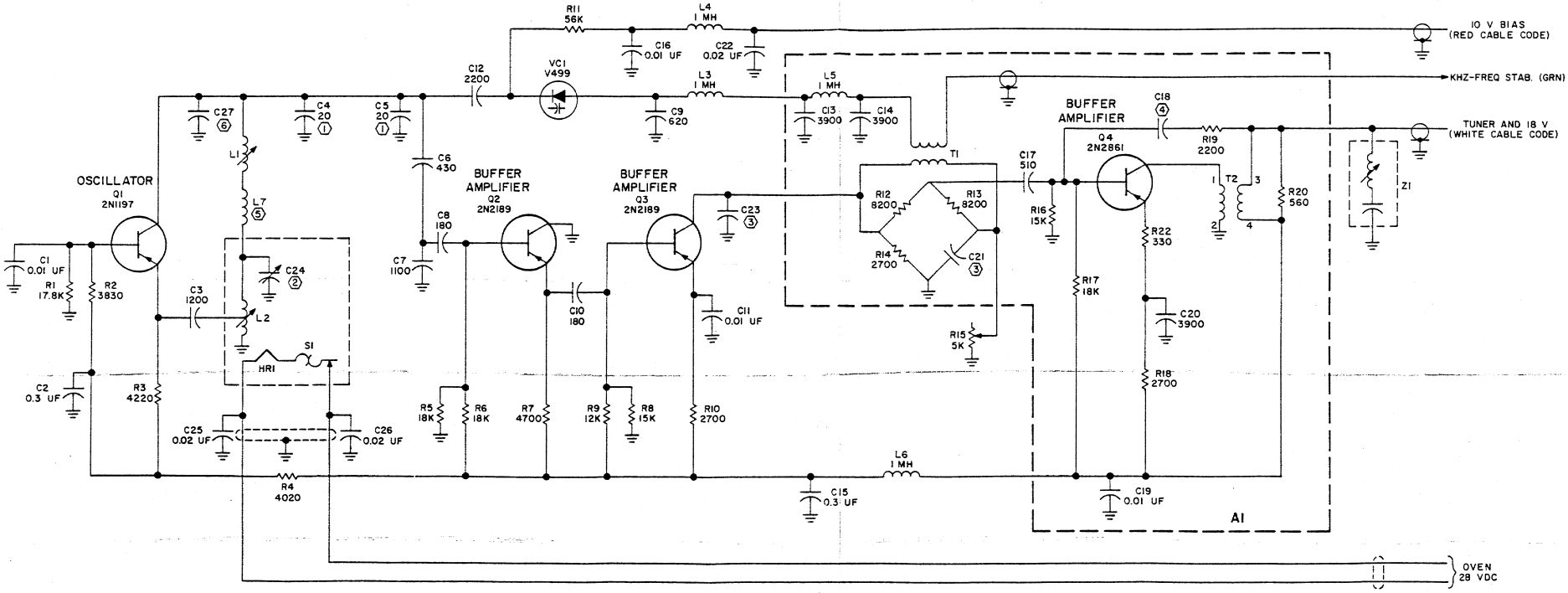

NOTES:

1. TEMPERATURE COMPENSATION SELECTED IN FINAL TEST.
2. VIBRATING COMPENSATING CAPACITOR.
3. SELECTED IN FINAL TEST FROM FOLLOWING VALUES:

0.51	3.0	6.2	10.0
1.0	3.6	6.8	15.0
1.5	4.3	7.5	20.0
2.0	4.7	8.2	24.0
2.4	5.1	9.1	30.0

4. SELECTED IN FINAL TEST FROM FOLLOWING VALUES: 8.2 10 15
5. SELECTED IN FINAL TEST FROM FOLLOWING VALUES: 0.1 UH 0.22 UH NONE
6. TEST SELECT.
7. UNLESS OTHERWISE SPECIFIED, RESISTANCE VALUES ARE IN OHMS, CAPACITANCE VALUES ARE IN PICOFARADS, AND INDUCTANCE VALUES ARE IN MICROHENRYS.

618T-1/2/3 VFO A12A2 (Model 70K-9), Schematic Diagram (Early Model)
Figure 834

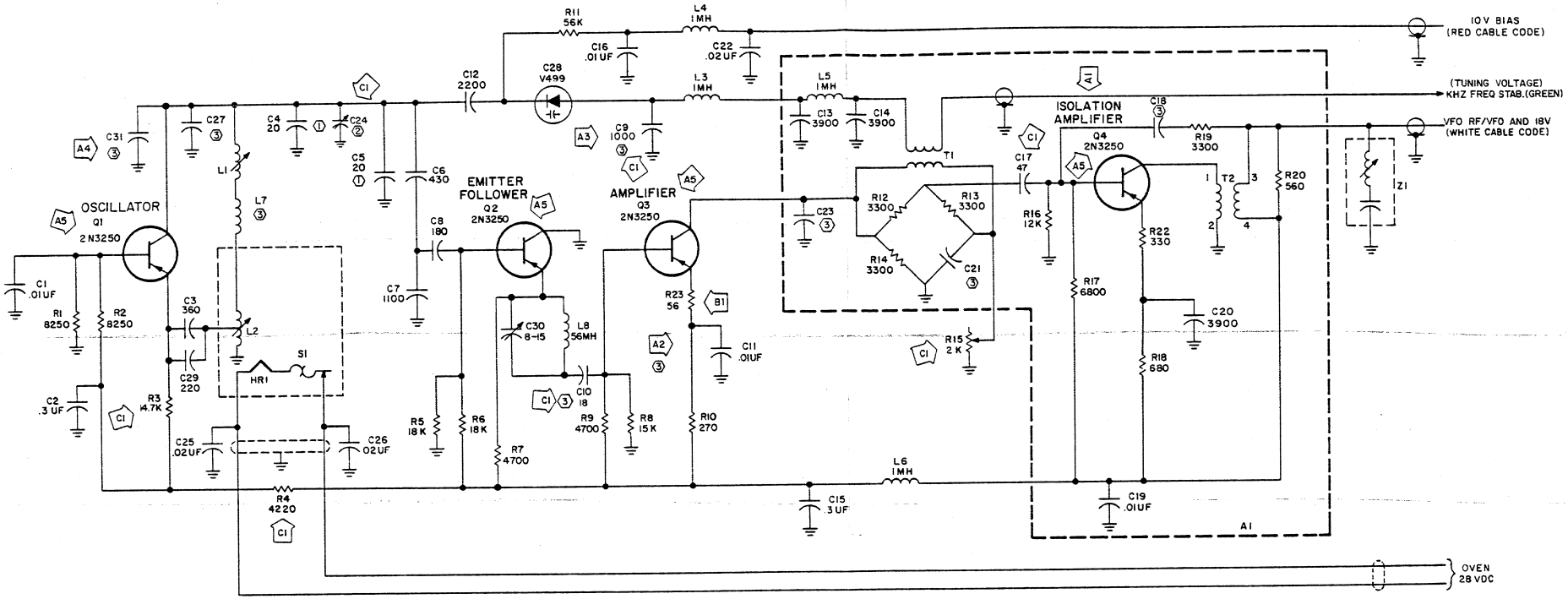

NOTES:

1. TEMPERATURE COMPENSATION SELECTED IN FINAL TEST.
2. VIBRATING COMPENSATING CAPACITOR.
3. TEST SELECT.
4. UNLESS OTHERWISE INDICATED, ALL RESISTANCE VALUES ARE IN OHMS, ALL CAPACITANCE VALUES ARE IN PICOFARADS, AND ALL INDUCTANCE VALUES ARE IN MICROHENRYS.
5. REFERENCE DESIGNATIONS ARE ABBREVIATED. PREFIX THE DESIGNATION WITH THE REFERENCE DESIGNATION A12A2.

554-4243-005
C1134-61-4

618T-1/2/3 VFO A12A2 (Model 70K-9), Schematic Diagram (Late Model)
Figure 833

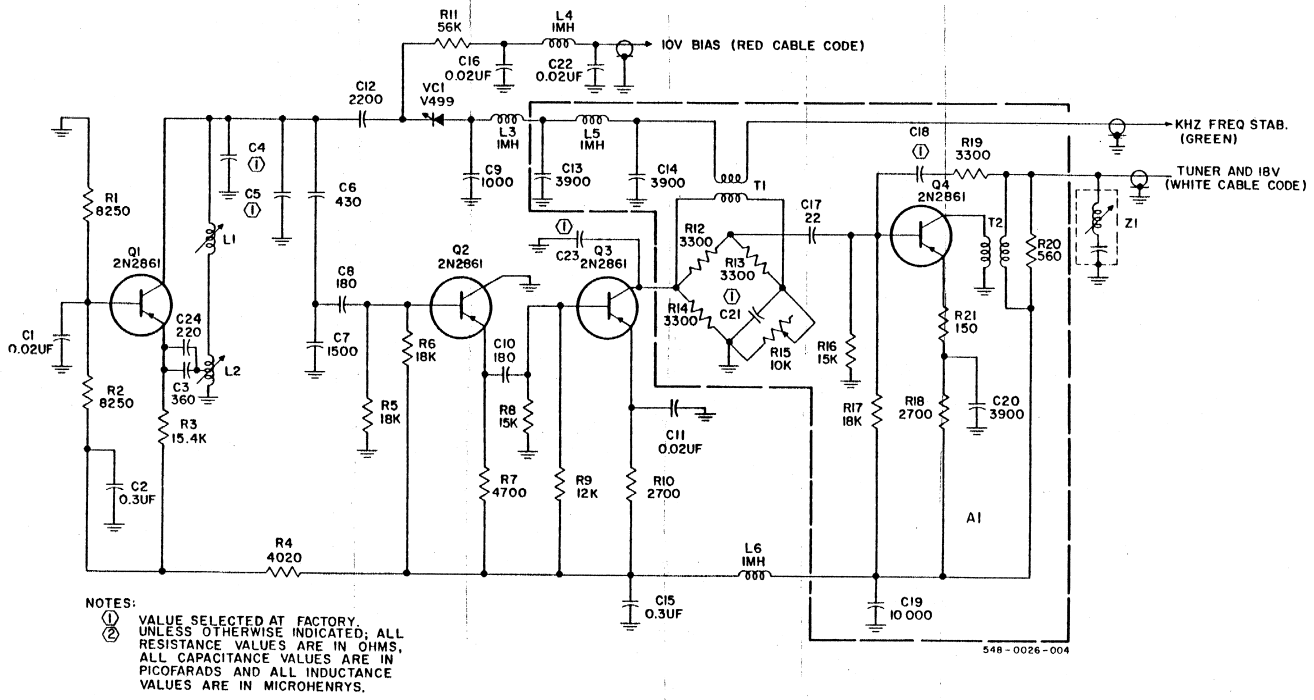

618T-1/2/3 VFO A12A2 (Model 70K-5), Schematic Diagram
Figure 835

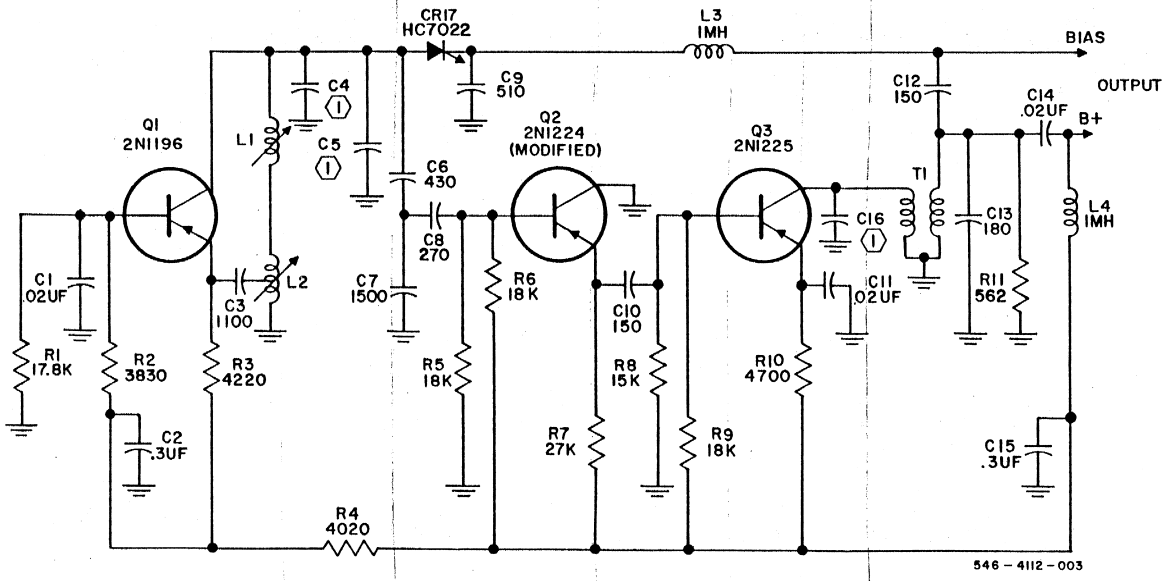

NOTES:

(1) SELECTED AT FACTORY.

(2) UNLESS OTHERWISE SPECIFIED; RESISTANCE VALUES ARE IN OHMS, CAPACITANCE VALUES ARE IN MICROFARADS, AND INDUCTANCE VALUES ARE IN MICROHENRYS.

618T-1/2/3 VFO A12A2 (Model 70K-3), Schematic Diagram
Figure 836

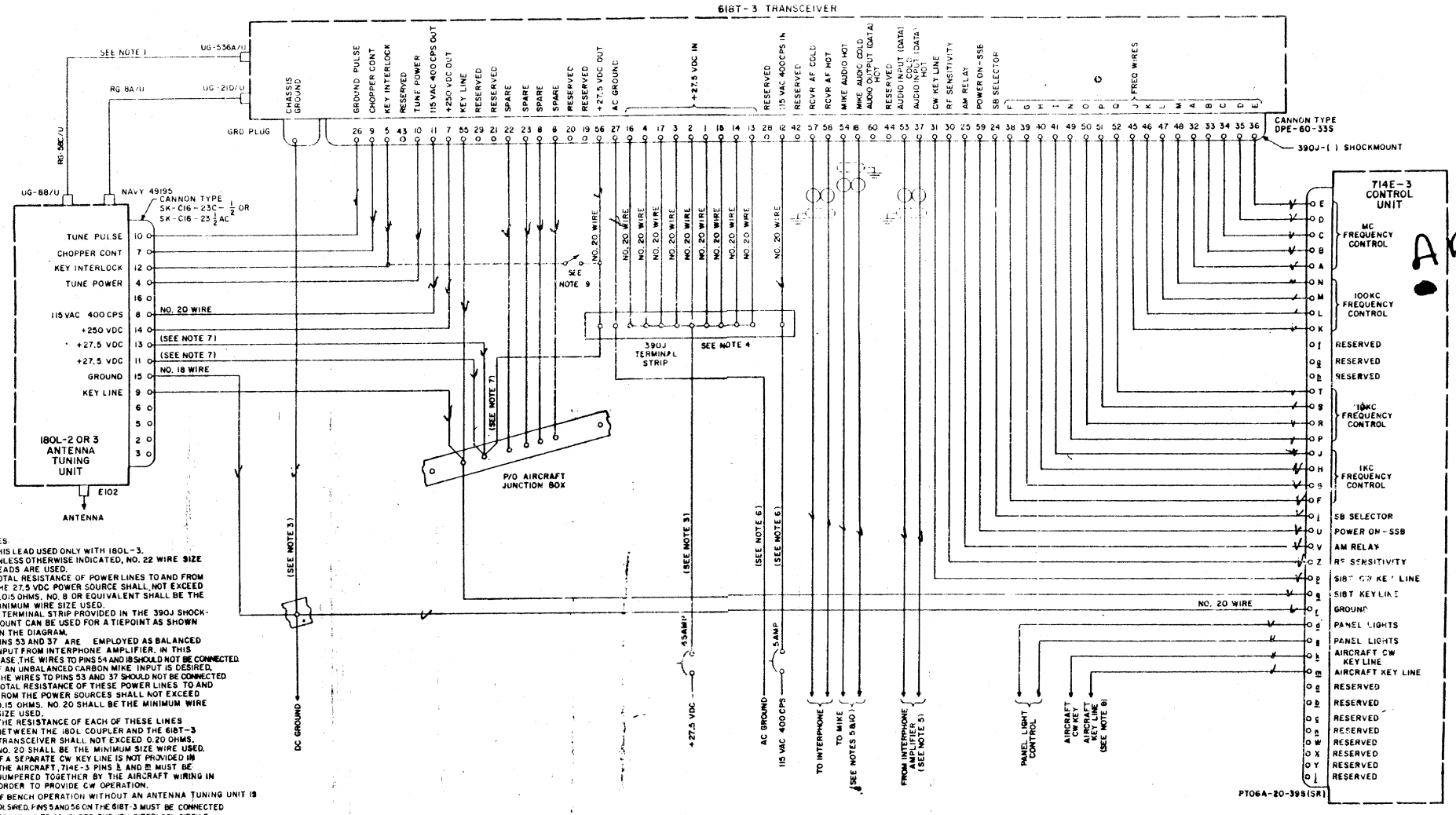

NOTES:

1. THIS LEAD USED ONLY WITH 180L-3.
2. UNLESS OTHERWISE INDICATED, NO. 22 WIRE SIZE LEADS ARE USED.
3. TOTAL RESISTANCE OF POWER LINES TO AND FROM THE 27.5 VDC POWER SOURCE SHALL NOT EXCEED 0.015 OHMS. NO. 8 OR EQUIVALENT SHALL BE THE MINIMUM WIRE SIZE USED.
4. A TERMINAL STRIP PROVIDED IN THE 390J SHOCK-MOUNT CAN BE USED FOR A TIEPOINT AS SHOWN ON THE DIAGRAM.
5. PINS 53 AND 37 ARE EMPLOYED AS BALANCED INPUT FROM INTERPHONE AMPLIFIER. IN THIS CASE, THE WIRES TO PINS 54 AND 18 SHOULD NOT BE CONNECTED. IF AN UNBALANCED CARBON MIKE INPUT IS DESIRED, THE WIRES TO PINS 53 AND 37 SHOULD NOT BE CONNECTED.
6. TOTAL RESISTANCE OF THESE POWER LINES TO AND FROM THE POWER SOURCES SHALL NOT EXCEED 0.15 OHMS. NO. 20 SHALL BE THE MINIMUM WIRE SIZE USED.
7. THE RESISTANCE OF EACH OF THESE LINES BETWEEN THE 180L COUPLER AND THE 618T-3 TRANSCEIVER SHALL NOT EXCEED 0.20 OHMS. NO. 20 SHALL BE THE MINIMUM SIZE WIRE USED.
8. IF A SEPARATE CW KEY LINE IS NOT PROVIDED IN THE AIRCRAFT, 714E-3 PINS k AND m MUST BE JUMPERED TOGETHER BY THE AIRCRAFT WIRING IN ORDER TO PROVIDE CW OPERATION.
9. IF BENCH OPERATION WITHOUT AN ANTENNA TUNING UNIT IS DESIRED, PINS 5 AND 56 ON THE 618T-3 MUST BE CONNECTED TOGETHER TO COMPLETE THE KEY INTERLOCK CIRCUIT. DO NOT CONNECT PINS 5 OR 56 TO AN EXTERNAL DC POWER SOURCE.
10. WHEN THE UNBALANCED CARBON MIKE INPUT IS USED, THE MIKE RETURN CIRCUIT SHOULD BE CONNECTED TO PIN 18 ON THE 618T-3. IT IS RECOMMENDED THAT NO GROUNDS EXTERNAL TO THE 618T-3 CHASSIS BE PLACED ON THIS LINE.

ARC 91

Airborne SSB Transceiver 618T-3, Control Unit 714E-3, and Antenna Tuner 180L-( ), Interconnecting Wiring Diagram
Figure 123